User manual
V 1.1 EN

EUROBOOR
FOR PROFESSIONALS BY PROFESSIONALS



Magnetic drilling machine

with integrated motor cable and 2-way electromagnet

ECO.40S+

Congratulations on purchasing this premium magnetic drilling machine. At Euroboor we strive to exceed our customers' expectations by developing and providing premium and innovative portable drilling and cutting solutions. We believe that a professional like you must be able to rely on a professional supplier. Which has led us to become a major player in the industrial world, with our own factory and several offices worldwide. All because we have always listened to our customers and to the demands from the market.

Our vision is focused on developing innovative portable tools that add value for our customers and facilitate them in their daily work. We never lose sight of sustainability, time savings and cost savings.

Enjoy your new machine!

Before operating your new magnetic drilling machine, please first read all instructions. You find the instructions in this manual and on the warning label on your machine. With proper use, care and maintenance your machine will provide you with years of premium drilling performance.

TO REDUCE THE RISK OF INJURY USER MUST READ AND UNDERSTAND ALL INSTRUCTIONS

To view all our offices and their contact information please visit: www.euroboor.com

Table of contents

ECO.40S+ 1
Table of contents 3
1. Safety 4
1.1 General safety instructions 4
1.2 Specific safety information 6
2. Description 8
2.1 Intended use 8
2.2 Description and features 8
2.3 Case content 9
2.4 Serial number 9
2.5 Technical data 10
2.6 Symbols 10
2.7 Environmental 11
3. Preparation & adjustment 12
3.1 Assembly 12
3.2 Prior to use 13
4. Using the machine 15
4.1 Control panel 15
4.2 2-Way electromagnet 15
4.3 Switching motor on and off 17
4.4 GYRO-TEC safety 17
4.5 Power surge and fluctuation protection 17
4.6 Carbon brushes 18
4.7 Tool lubrication 19
5. Working with drilling accessories 20
5.1 Annular cutters 20
5.2 Twist drills 22
5.3 Countersinks 23
6. Maintenance 24
7. Trouble shooting 26
8. Exploded views & spare parts list 28
8.1 Exploded views 28
8.2 Spare parts list 31
8.3 Wiring diagram 33
8.4 Warranty and service 34

1. Safety

1.1 General safety instructions

Do not use this magnetic drilling machine before you have thoroughly read and completely understood this manual, specifically the “General safety instructions” and ‘’Specific safety information’’ , including the figures, specifications, safety regulations and the signs indicating DANGER, WARNING and CAUTION.

⚠ **WARNING:** When using electrical tools basic safety precautions should always be followed to reduce the risk of fire, electrical shock and personal injury.

Please also observe the relevant national industrial safety regulations. Non-observance of the safety instructions can lead to an electric shock, burns and/or severe injuries.

This manual should be kept for later use and enclosed with the magnetic drilling machine, should it be passed on or sold.

Work area

1. Keep your work area clean and well lit. Cluttered and dark work areas increase the change of accidents;
2. Do not operate a magnetic drilling machine in explosive atmospheres, such as in the presence of flammable liquids, gases or dust. A magnetic drilling machine may create sparks which could ignite the dust or fumes;
3. Keep bystanders, children and visitors away while operating a magnetic drilling machine. Distractions can cause you to lose control.

Electrical safety

1. A magnetic drilling machine plug must match the outlet. Never modify the plug in any way. Do not us any adapter plugs;
2. Avoid body contact with grounded surfaces such as pipes, radiators, ranges and refrigerators. There is an increased risk of electric shock if your body is grounded;
3. Do not expose the magnetic drilling machine to rain or wet conditions. Water entering a machine will increase the risk of electric shock;
4. Do not abuse the cord. Never use the cord to carry the magnetic drilling machine or pull the plug from an outlet. Keep the cord away from heat, oil, sharp edges or moving parts. Replace damaged cords immediately. Damaged cords increase the risk of electric shock;
5. When operating a magnetic drilling machine, use an extension cord suitable for outdoor use, this reduces the risk of electric shock;
6. If operating a magnetic drilling machine in a damp location is unavoidable, use a residual current device (RCD), this reduces the risk of electric shock.

Personal safety

1. Stay alert, watch what you are doing and use common sense when using a magnetic drilling machine. Do not use the machine while tired or under the influence of drugs, alcohol, or medication. A moment of inattention while operating a magnetic drilling machine may result in serious personal injury;
2. Dress properly. Do not wear loose clothing or jewellery. Keep your hair, clothing and gloves away from moving parts. Loose clothes, jewellery, or long hair can be caught in moving parts;
3. Avoid accidental starting. Be sure the switch is off before plugging the machine in. Carrying a magnetic drilling machine with your finger on the switch or plugging in a magnetic drilling machine that has the switch on increases the change of accidents;
4. Never place hands, fingers, gloves or clothing near drilling area or rotating machine parts;
5. Remove adjusting keys or switches before turning the machine on. A wrench or a key that is left attached to a rotating part of the machine may result in personal injury;
6. Do not overreach. Keep proper footing and balance at all times. Proper footing and balance enable better control of the magnetic drilling machine in unexpected situations;
7. Use safety equipment. Always wear eye protection. Dust mask, non-skid safety shoes, hard hat and hearing protection must be used for optimal safety;
8. Always use supplied safety chain during any work on non-horizontal surfaces. Magnetic drilling machine can release from surface;

When using this machine, you MUST wear ear and eye protection.

Machine use and care

1. When using the machine on non-horizontal surfaces, you must use cutting paste. Do not use oil because the oil can drip into the motor unit;
2. While operating the machine, the annular cutter must be cooled and lubricated with high-quality cutting lubricants;
3. Always remove the slug from the annular cutter after each hole. **Caution**; the slug may be hot;
4. Use clamps or other practical solutions to secure and support the workpiece to a stable platform. Holding the workpiece by hand or against your body is unstable and may lead to loss of control;
5. Do not use the machine when the switch does not turn it on or off. Any machine that cannot be controlled with the switch is dangerous and must be repaired;
6. Disconnect the plug from the power source before making any adjustments, changing accessories or storing the tool. Such preventive safety measures reduce the risk of starting the tool accidentally;
7. Store your magnetic drilling machine out of reach for children and other untrained persons. Tools are dangerous in the hands of untrained users;
8. Maintain your machine with care. Keep cutting tools sharp and clean. Properly maintained tools, with sharp cutting edges are less likely to break and are easier to control;
9. Check for misalignment of moving parts, breakage of parts and any other condition that may affect the machine's operation. If you detect damage have the machine serviced before use. Many accidents are caused by poorly maintained tools;
10. Only use accessories that are recommended by Euroboor for your machine model. Accessories that are suitable for one machine may become hazardous when used on another machine.

Service

1. Tool service must be performed only by qualified repair personnel. Service or maintenance performed by unqualified personnel could result in risk of injury;
2. When servicing a tool, use only identical replacement parts. Follow instructions in the maintenance section of this manual. Use of unauthorised parts or failure to follow maintenance instructions may create a risk of electric shock or injury.
3. Euroboor offers Armature kits containing official Euroboor spare parts suitable for your magnetic drilling machine.

1.2 Specific safety information

- Keep your fingers away from the drilling area;
- Avoid touching the slug that is automatically ejected by the pilot pin when the working procedure is finished. Contact with the slug when it is hot, or if it falls, can cause personal injuries;
- Always use the safety guard. Before switching on the machine ensure that the guard is closed securely;
- Always use the safety chain;
- The magnetic drilling machine is suitable for use on steel with a thickness starting from 6 mm, with zero air gap between the magnet core surface and the mounting surface. Curvature, coats of paint and surface irregularities will create an air gap. Keep the air gap to a minimum;
- Always place the machine on a flat surface;
- Do not clamp the magnetic drilling machine on small or irregular shaped objects;
- Always place the machine on a surface that is clear of shavings, chips, swarf and surface dirt;
- Keep the magnet clean and free of debris and swarf;
- Do not switch on the machine before checking whether the magnetic stand has been tightened firmly to the mounting surface;
- Adjust the machine so cutter does not extend into the workpiece before drilling. Do not perform any design, assembly or construction activities on the workpiece while the machine is switched on;
- Before switching on the machine, make sure all accessories have been mounted correctly;
- Do not switch on the machine until it has been mounted and installed according to all above mentioned instructions;
- Always use the recommended speed for the accessories and material you are working with;
- Do not use the machine on the same workpiece on which electric welders are working;
- Only use an appropriate cutting lubricant. Euroboor offers a wide range of well-considered cooling and lubrication products to match your requirements;
- Do not use liquid cutting fluids while drilling vertically or overhead. Dip the cutter in cutting paste or apply an appropriate spray for these applications;
- Do not pour cutting fluid into the reservoir while it is mounted in the bracket. Do not allow cutting fluid to enter the drill motor;
- Before use, ensure movable safety guard operates properly;
- In case of a jammed cutter, turn of the machine, disconnect the machine from the power supply and then remove the reason for the jam before turning on the machine again.

Residual risk

Despite following the relevant safety regulations and their implementation, certain residual risks cannot be avoided. These are:

- Impairment of hearing ;
- Risk of personal injury from flying particles;
- Risk of burns due to accessories becoming hot during operation;
- Risk of personal injury due to prolonged use.

Always try to reduce these risks as much as possible.

2. Description

2.1 Intended use

This magnetic drilling machine is intended for commercial use as a drilling machine for drilling materials with a magnetisable surface using annular cutters and twist drills, and for countersinking in a weather-protected environment using the application tools and accessories recommended by Euroboor.
The magnetic drilling machine can be used horizontally, vertically or overhead.

2.2 Description and features

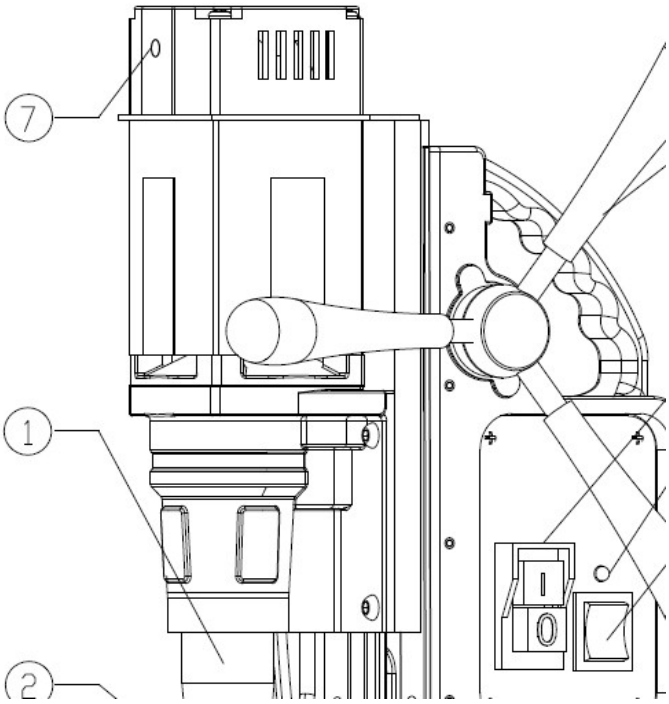

1. Output shaft
2. Electromagnet
3. Feed handle
4. Motor switch
5. Magnet LED indicator
6. Magnet switch
7. Carbon brush LED indicator

[image 2-1]

2.3 Case content

1 x ECO.40S+ Magnetic drilling machine
1 x safety guard
3 x handles
1 x hex key 2.5 mm
1 x hex key 3 mm
1 x hex key 4 mm
1 x hex key 5 mm
1 x lubrication system
1 x safety chain
1 x bottle (200 ml) of IBO.10 cutting oil
1 x user manual
1 x safety ear protection
1 x safety goggles
1 x safety gloves

2.4 Serial number

The serial number is mentioned on the machine three times: engraved on the frame, engraved on the magnet and on the serial no. sticker on the motor housing. Additional serial no. stickers are provided with the machine for your administration.

The serial number will help you, your dealer and Euroboor to validate and identify the machine.

For example:

0401909001

breaks down to:

040 *19* *09* *001*
Machine series
Year of manufacture
Month of manufacture
Identification number

2.5 Technical data

	Metric	Imperial
Annular cutting	Ø 12 - 40 mm	Ø 7/16" - 1 9/16"
Twist drilling	Ø 1 - 16 mm	Ø 1/16" - 5/8"
Threading	-	-
Countersinking	Ø 10 - 45 mm	Ø 3/8" - 1 3/4"
Length	264 mm	10 3/8"
Width	180 mm	7 1/16"
Height	360 - 440 mm	14 3/16" - 17 5/16"
Stroke	145 mm	5 11/16"
Weight	11.2 kg	24.7 lbs
Magnet (l x w x h)	160 x 80 x 42 mm	6 5/16" x 3 1/8" x 1 5/8"
Magnetic force	1,500 kg	3,305 lbs
Motor power	1,150 W	10.5 A
Total power	1,200 W	10.9 A
Speed (no load) **Speed (load 1,150 W)**	600 rpm 380 rpm	600 rpm 380 rpm
Spindle (Weldon)	19.05mm	3/4"
Voltage	110 - 120 V / 60 Hz 220 - 240 V / 50 - 60 Hz	

2.6 Symbols

Symbol	Term, meaning	Explanation
	Read documentation	Be absolutely sure to read the documentation in this user manual and specifically the “General safety instructions” and ‘’Specific safety information’’.
	Wear ear protection	Use ear protection during operation.
	Wear eye protection	Use eye protection during operation.
	Danger/warning/caution	Read and apply the information in the adjacent text!
CE	European conformity symbol	Confirms the conformity of the magnetic drilling machine with the directives of the European Community.
	Class of protection I	Product with basic insulation and exposed (touchable) conductive parts additionally connected to the protective earth conductor.
mm	Millimetre	Unit of measure for the dimensions.

Symbol	Term, meaning	Explanation
"	Inch	Unit of measure for the dimensions.
kg	Kilogram	Unit of measure for the mass.
lbs	Pound	Unit of measure for the mass.
V	Volt	Unit of measure for the electric voltage.
A	Ampere	Unit of measure for the electric current intensity.
W	Watt	Unit of measure for the output.
rpm	Revolutions per minute	Unit of measure for the revolutions.
no	No load speed	Revolution speed at no load.

2.7 Environmental



Separate collection. This product must not be disposed of with normal household waste.



Separate collection of used products and packaging allows materials to be recycled and used again. Re-use of recycled materials helps prevent environmental pollution and reduces the demand for raw materials.

Local regulations may provide for separate collection of electrical products from the household, at municipal waste sites or at the retailer when you purchase a new product.

3. Preparation & adjustment

3.1 Assembly

WARNING: *To reduce the risk of injury, turn machine off and disconnect from power source before installing and removing accessories, before adjusting or changing set- ups or when making repairs. Be sure all switches are in the OFF position. An accidental start-up can cause injury.*

Fitting the feed handles

1. Fit each of the three feed handles by screwing them into the hub in clockwise direction;
2. Tighten firmly by hand.

The handles are supposed to face slightly outward. Be careful not to cross-thread any of the components.

Mounting the safety guard

The safety guard protects against chippings and accidental contact and must always be mounted before operation.

1. Hold the guard in front of the magnet, align the slots in the guard with the holes in the magnet.
2. Fit the screws into the holes located in the side of the magnet.

WARNING: *Always use the safety guard.*

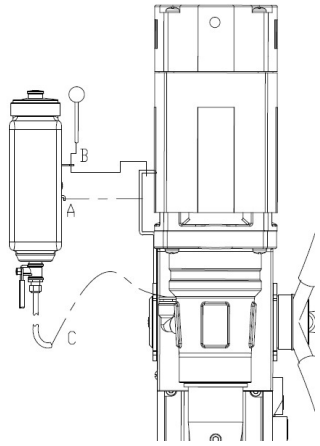

Fitting the lubrication system

The lubrication system can only be used for horizontal drilling (the drill being used vertically).

1. Hang the tank (A) on the tank holder;
2. Position and tighten the attachment pin (B);
3. Connect the hose (C) to the fitting on the gearbox. Make sure the hose is connected fully and tightly;
4. To disconnect the hose, press the blue ring on the connection and gently pull out the hose.

[image 3-1]

To use the lubrication system, it must be filled with enough cutting fluid.

1. Make sure the flow regulator is closed;
2. Unscrew the cap;
3. Fill the container with cutting fluid;
4. Screw the cap back on.

WARNING: *Do not use the lubrication system in vertical or overhead drilling applications. Instead use Euroboor cutting paste.*

Fitting the safety chain

1. Pass the safety chain through the frame grip opening;
2. Wrap the chain around the workpiece;
3. Securely close the chain using the lock.



WARNING: *Always use the safety chain when drilling vertically and/or up-side-down. The safety chain does not replace the magnetic force of the magnetic drilling machine: it is simply used to secure against falling in the event of a magnet malfunction.*

3.2 Prior to use

Please make sure that the contacting surface for the magnet is level, clean and rust free.
Remove any varnish or primer. When working on materials that are not magnetisable, suitable fixation devices, obtainable as accessories from Euroboor, e. g. suction plate, vacuum plate or pipe-drilling machine must be used.
When working on steel materials with a material thickness of less than 6 mm, the workpiece must be reinforced with an additional steel plate to guarantee the magnetic holding power.

Check the machine for possible damage; Before using the machine, you must carefully check the protective components or slightly damaged components to ensure they are operating perfectly and as intended.
Check that moving parts are in perfect working order, do not jam and check whether the parts are damaged. All parts must be correctly installed and fulfil all conditions necessary to ensure perfect operation of the machine.
Damaged protective components must be repaired or replaced according to specifications by Euroboor or any authorised Euroboor dealer.

DO NOT use under wet conditions or in presence of flammable liquids or gases.

DO NOT let children come into contact with the machine. Supervision is required when inexperienced operators use this machine.

Electrical safety
The electric motor has been designed for one voltage only. Always check that the power supply corresponds to the voltage on the rating plate.

Your Euroboor magnetic drilling machine is designed in class I (grounded) according to EN 61029-1. Earth wire is required.

If the supply cord is damaged, it must be replaced by a specially prepared cord available at Euroboor or your Euroboor dealer.

Extension cable
If an extension cable is required, use an approved 3-core extension cable suitable for the power input of this machine (see technical data).The minimum conductor size is 1.5 mm^2; the maximum length is 30 meter. When using a cable reel, always unwind the cable completely.

Useful tips

- Try a few simple projects using scrap material until you develop a ‘’feel’’ for the magnetic drilling machine;
- Let the machine run in for a period of eight to ten hours before starting with big operations. Do not load the machine too much during this run-in period;
- Never use the machine with serious overload;
- Always keep the machine clear from moisture to protect the machine, yourself and others.

4. Using the machine

WARNING: *Always observe the safety instructions and applicable regulations.*

WARNING: *To reduce the risk of serious personal injury, turn the machine off and disconnect the machine from power source before making any adjustments or removing/installing attachments or accessories.*

4.1 Control panel

The control panel on your magnetic drilling machine is designed for maximum ease of use and safety.

1. Magnet switch
2. Motor switch
3. Magnet LED Indicator

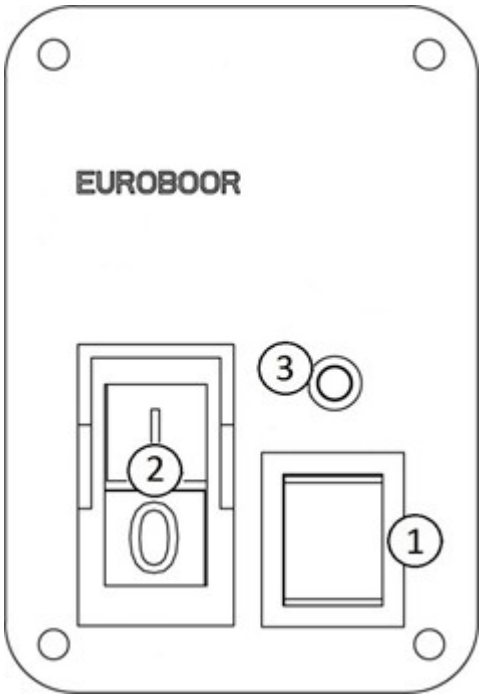

[image 4-1]

4.2 2-Way electromagnet

Make sure the magnetic drilling machine is placed on a smooth, clean, level and solid surface without any objects or debris to guarantee maximum adhesion.

The workpiece must at least be 6 mm (1/4") thick for the magnet to stick and to drill safely. In case the workpiece is between 3 mm (1/8") and 6 mm (1/4"), make sure to make a proper base to create a good magnetic field as shown below.

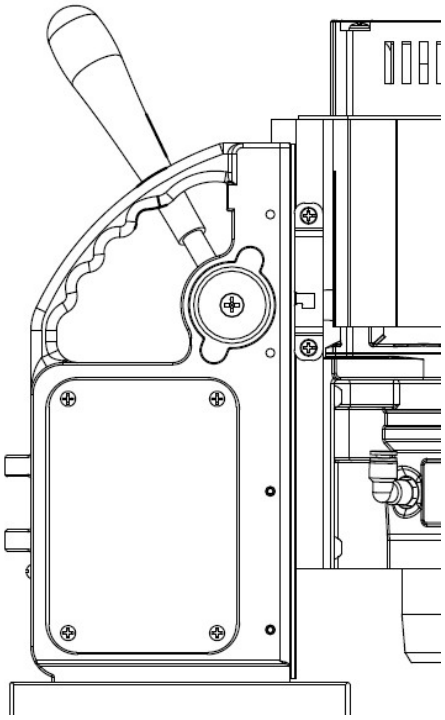

[image 4-2]

The electromagnet will work best on surfaces of at least 10 mm (3/8") thickness.

When the electromagnet cannot create a good enough magnetic field, this may be caused by:

- Surface not being flat;
- Workpiece is not magnetisable (e.g. aluminium);
- Workpiece is coated or painted;
- Workpiece is not thick enough.

In this situation the magnet indicator will light up red. Make sure to solve any of these matters before proceeding in any way and creating unsafe situations.

2-Way magnet

This machine is equipped with a 2-way magnet function. At half of the magnetic force (750 kg), the magnet sufficiently sticks to the surface to hold the machine in position while not in use. More importantly, it consumes less energy, generates less heat and therefore will last longer. Only with full magnetic force (1,500 kg) the machine can be used for drilling.

Using the 2-way magnet:

1. Place and position the machine on the workpiece;
2. To activate the magnet at half of the force, press the red magnet switch:
   The magnet switch will be lit (red);
   The LED indicator lights up GREEN when generated force is sufficient;
3. For full magnetic force, press the green motor switch (see next paragraph);
4. To deactivate the magnet, first press the red motor switch to return to half magnetic force and then press the magnet switch again.

⚠ ***WARNING:*** *Do not use this machine when LED indicator is RED. Magnet may not generate sufficient attachment force.*

We want to point out that above mentioned precautions and indicators do not guarantee that the magnet will not release from the material. Euroboor accepts no liability when it comes to the magnet indicator not functioning or functioning poorly.

Make sure that the magnet attaches tightly to the work piece before turning on the motor unit of the magnetic drilling machine. Euroboor magnets have two coils; make sure that both coils are in contact with the material. Do not connect any other machine to the same electrical outlet to which the magnetic drilling machine is plugged into, as it may result in the loss of magnetic force.

Always use the safety chain included. Drilling above your head is extremely dangerous and is not recommended. For the use of magnetic drilling machines on pipes, not-flat or non-magnetic materials, we refer to our catalogue or our website www.euroboor.com where several vacuum tightening systems, pipe clamping systems and Tube machines can be found.

4.3 Switching motor on and off

The motor unit can only be switched ON when the magnet is activated. To switch the motor ON, press the green button with marking “I”. To switch the motor OFF, press the red button with marking “O”.

4.4 GYRO-TEC safety

This Euroboor magnetic drilling machine is equipped with GYRO-TEC safety functionality. It features a gyroscopic sensor which detects acceleration and displacement in any direction. Whenever the machine recognizes a sudden or unwanted movement the motor will be shut down automatically by the machine’s electronics. This safety functionality offers protection to the user in various circumstances, such as:

- Sudden loss of magnetic force while in operation;
- Excessive vibration caused by incorrect drilling procedure, worn-out cutting tools, etc;
- Sudden displacement of the workpiece to which the magnetic drilling machine is attached

By the motor shutting down automatically, risk of damaging or hurting the machine, tools, workpiece and operator is reduced.

Every time the motor is started, the machines electronics need a moment to run a systems check and initiate the safety system. The GYRO-TEC safety feature engages three seconds after the motor is started.

It is very important to note that this functionality raises the safety level but does not prevent the operator from using the machine incorrectly. The operator should always follow instructions described in this manual and take all necessary safety precautions.

4.5 Power surge and fluctuation protection

This machine is equipped with power surge and fluctuation protection, making the machine suitable for use in areas and workplaces where power supply is of less quality.

The machine will shut down part of the electronics and the motor by itself when the machine cannot cope with insufficient or unreliable power supply. This prevents the control unit(s) in the machine from breaking by cause of power supply, and thus unexpected downtime and high repair cost. In such a situation the magnet will remain switched on.

Power surge protection

The machine can cope with voltage spikes up to **4,000V (1-2µs)**.*

Power fluctuation protection

The machine can cope with voltage and frequency fluctuations ranging from:

110 Volt to 130 Volt - 45 Hz to 65 Hz
220 Volt to 240 Volt - 45 Hz to 65 Hz

When the frequency is too high or too low, so it falls outside of above-mentioned range, the motor will not start. If the frequency of the power supply falls outside the range or fluctuates strongly during your drilling job, the motor shut off automatically.*

*** Disclaimer: Euroboor is not liable for any damage caused to the machine due to electrical problems in the workplace. Above mentioned protection is not guaranteed in all cases of voltage and frequency spikes or fluctuations. Euroboor accepts no liability when it comes to the power surge or fluctuation protection not functioning or functioning poorly.**

In the situation of the motor being shut off automatically as self-protection, you should:

- Shut off the magnet;
- Disconnect the machine from the power source;
- Fix the source of the problem, by either;
    - Making sure the issues with the power source is fixed;
    - Connect the machine to a different and reliable power source;
- Continue using the machine as described in this user manual.

4.6 Carbon brushes

This machine is equipped with carbon brushes with two protection features. The purpose of both features is to schedule timely service and avoid additional costs by unexpected downtime or unnecessary part replacement.

Carbon brush wear indicator

On top of the motor housing, you will find an integrated LED light. Under normal circumstances this light is off. The LED light will start burning red when the carbon brushes are worn to a level where it is advised to replace them.

Actual remaining operating time depends on the use of the machine but can be at least twelve operating hours. This makes it possible to schedule service of the machine and avoid unexpected downtime.

Automatic shut-off

As additional protection, when the carbon brushes are worn to a level where replacement is needed, the motor will shut off automatically. This prevents the armature from being damaged. During automatic shut-off, the carbon brush wear indicator is not lit.

For replacement of carbon brushes, see chapter 6. Maintenance.

4.7 Tool lubrication

In horizontal applications

To use the lubrication system, the tank must be filled with a cutting lubricant.

1. Make sure the flow regulator is closed;
2. Unscrew the cap;
3. Fill the container with cutting lubricant;
4. Screw the cap back on.

- Adjust the fluid flow as required using the flow regulator;
- Add more cutting lubricant when the shavings (metal chips) become blue.

Vertical and overhead applications

Dip the cutter in cutting paste or apply an appropriate spray.



WARNING: *Do not use the lubrication system in vertical or overhead drilling applications. Instead use Euroboor cutting paste.*

Make sure to use only suitable cutting lubricants. Euroboor offers a wide range of cutting lubricants for all tool and material combinations. Proper lubrication will help you create better and faster results and extend the lifetime of your tools.

5. Working with drilling accessories

5.1 Annular cutters

Annular cutters only cut material at the periphery of the hole, rather than converting the entire hole to shavings. As a result, the energy required to make a hole is lower than for a twist drill.
When drilling with an annular cutter, it is not necessary to drill a pilot hole.

⚠ ***WARNING:*** *Do not touch the cutter or the parts close to the cutter immediately after operation, as they may be extremely hot and cause burns to the skin. Ensure nobody is in the work area where the metal core (slug) is ejected.*

Drilling conditions
The ease with which material can be drilled depends on several factors including tensile strength and abrasion resistance. Whilst hardness and/or strength is the usual criterion, wide variations in machinability can exist among material showing similar physical properties.

The drilling conditions are dependent on requirements for tool life and surface finish. These conditions are further restricted by the rigidity of the tool and the workpiece, lubrication and machine power available. The harder the material, the lower the cutting speed.

Some materials of low hardness contain abrasive substances leading to rapid cutting-edge wear at high speeds. Feed rates are governed by rigidity of set-up, volume of material to be removed, surface finish and available machine power.

Drilling a hole
Now that you have read the information and safety recommendations above, you are ready to start drilling. Follow these 12 steps for best drilling result:

1. Install the annular cutter:
   - Place the pilot pin into the cutter;
   - Align the flat faces on the cutter shank with the screws in the tool holder;
   - Make sure the cutter shank is entered fully and correctly;
   - Tighten the screws;

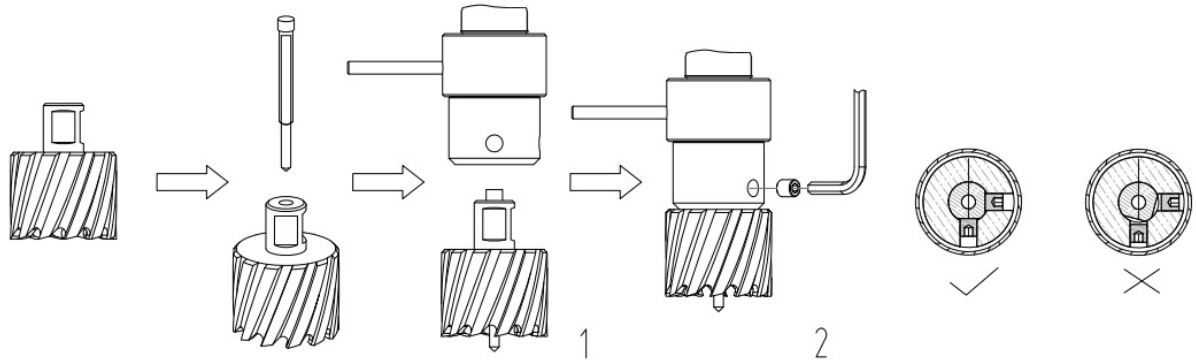

[image 5-1]

2. Precisely mark the centre of the hole;

3. Use the pilot pin to position the machine in the correct position, with the tip of the pilot pin to meet the marked centre of the hole;

4. Switch on the magnet and verify that the drill is in the right position and that the machine is pushed tight against the work piece;

5. Put open the valve to release the oil;

6. Switch the motor on and allow it to run at the required speed;

7. Turn the feed handles to start drilling. Apply only a slight pressure when the annular cutter touches the metal. Do not push the annular cutter with force into the metal;

8. Apply a regular pressure while drilling. The drilling performance does not improve by putting more pressure on the machine. Too much pressure will overload the motor, and your annular cutter will be worn sooner;

   A continuous, non-discoloured iron swarf is a sign of correct drilling speed and a well-cooled, sharp cutter. Let the cutter do the job and give it time to cut the metal!

9. Adjust the oil supply when necessary;

10. Apply less pressure when the drill cuts through the material. The slug will be pushed out of the cutter by the pilot pin;

11. Turn the feed handles to put the motor in highest position and switch off the motor unit;

12. Remove the burrs, metal chips and clean the cutter and surface without getting injuries.

Caution: The slug can be sharp and very hot!

5.2 Twist drills

1. Fit the twist drill:

    a. Straight shank twist drills
    Use a Weldon drill chuck adapter (such as Euroboor IBK.14, adapter 19.05 mm (3/4") Weldon (external) to 1/2" x 20 UNF) to fit a drill chuck and straight shank twist drill accordingly;

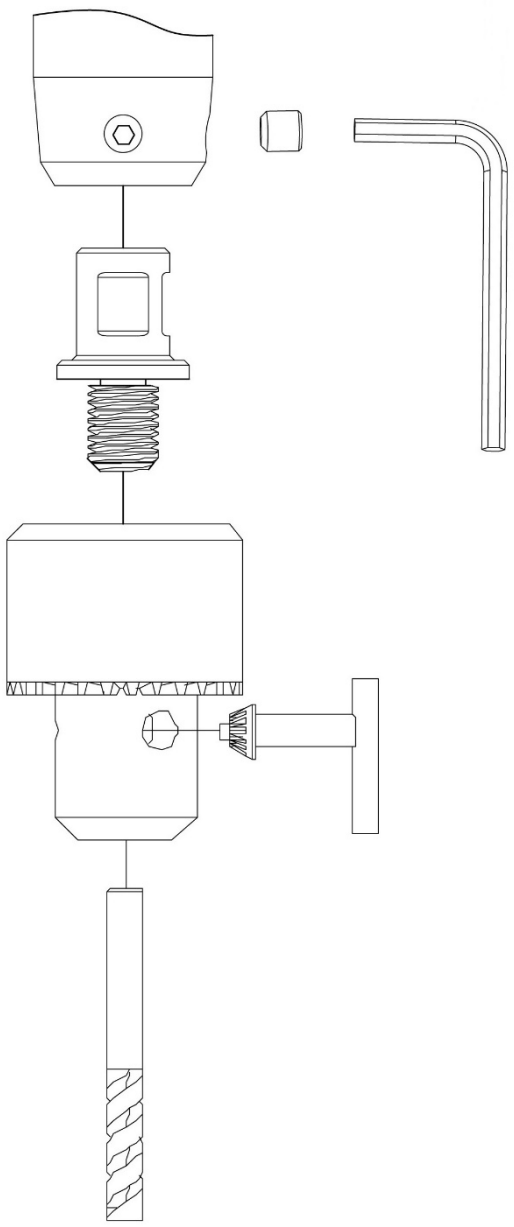

[image 5-2]

b. Weldon shank twist drills:
   Directly fit a Weldon shank twist drill (such as Euroboor SPI/SSPI-series) directly to the machine;

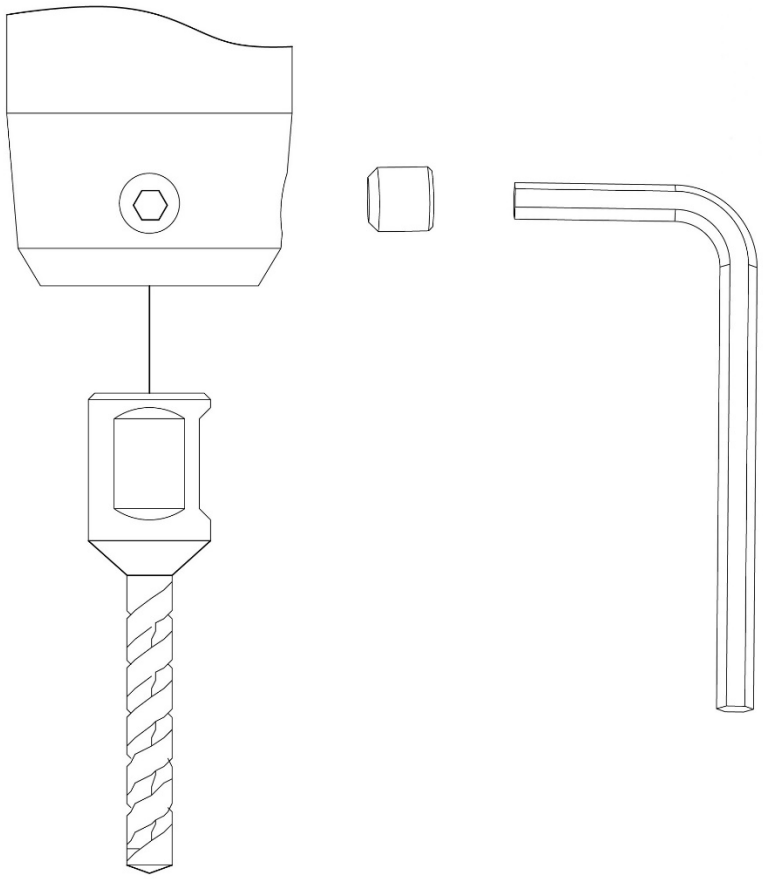

[image 5-3]

2. Precisely mark the centre of the hole and use the tip of the twist drill to position the machine in the correct position, with the tip of the twist drill to meet the marked centre of the hole.

Steps 3-12: see paragraph 5.1 Annular cutters. Make sure the machine runs at maximum speed for twist drills!

5.3 Countersinks

Thanks to its wide range of operating speeds, the machine can also be used for reaming or countersinking. Follow the steps mention in paragraph 5.2 Twist drills.

6. Maintenance

Your Euroboor magnetic drilling machine has been designed to operate over a long period of time. Continuous satisfactory operation depends upon proper tool care and regular cleaning.

⚠ **CAUTION: To reduce the risk of injury, turn the machine off and disconnect machine from power source before installing and removing accessories, before adjusting or changing set-ups or when making repairs. Be sure the switch is in the OFF position. An accidental start-up can cause injury.**

Just as every magnetic drilling machine with moving parts, your Euroboor magnetic drilling machine also needs regular maintenance service. A few recommendations follow :

Visually check the machine for damage
The machine must be checked before operating for any signs of damage that will affect the operation of the machine. Particular notice must be taken of the main cable, if the machine appears to be damaged it should not be used. Failure to do so may cause injury or death.

Cleaning
- Clean all dirt, dust, metal chips and burrs of your magnetic drilling machine;
- Blow dirt and dust out of the main housing with dry air as often as dirt is seen collecting in and around the air vents. Wear approved eye protection and an approved dust mask;
- Never use solvents or other harsh chemicals for cleaning the non-metallic parts of the tool. These chemicals may weaken the materials used in these parts. Use a cloth dampened only with water and mild soap. Never let any liquid get inside the tool; never immerse any part of the tool into a liquid.

Operation of the machine
The machines operation must be checked to ensure that all components are working correctly. Replace any defective parts immediately. This prevents properly functioning parts from being damaged.

Check magnetic base
Before every operation the magnetic base should be checked to make sure that the base is flat and there is no damage present. An uneven magnet base will cause the magnet to hold not as efficiently and may cause injury to the operator. When the machine is put out of use for a longer period, apply a small amount of machine oil to the underside of the magnetic base for rust protection. Clean the magnetic base again with next use.

Check gearbox oil (IBO.G101)
The oil should be checked once a month to ensure all moving components are covered to prevent wear. The oil should be changed at least once a year to ensure you gain the best from the machine.

Carbon brush replacement
Schedule to replace the carbon brushes when the carbon brush LED indicator lights up. The remaining operating time depends on the use of the machine. When the carbon brushes are fully worn, the machine will shut-off automatically. Replace the carbon brushes to get it working again.

Check armature
This should be checked at least once a month to check if there are visual signs of damage to the body or to the commutator. Some signs of wear will be seen on the commutator over a period of time. This is normal, as this is the part that comes in contact with the brushes, but any signs of abnormal damage mean the part should be replaced.

Adjustment of slide
An essential requirement of the machine is that the slide can be move in a smooth and controlled manner, free of lateral movement and vibration.

This situation can be maintained by periodic adjustment of the slide and can accomplished in the following manner:

1. Place the machine in an upright position and, by means of the capstan, raise the slide to its highest position. Clean the aluminium rails and apply a small amount of light machine oil to the wear surfaces;
2. Gently feed in setting screw with supplied Allen key 2.5 until slight resistance is encountered. Follow your way down adjusting all setting nuts and screws;
3. Operate the slide up and down a few times to test the movement and make any further necessary adjustments. Try to ensure that all the screws are exerting a uniform pressure on the slide from top to bottom. A perfectly adjusted slide will operate freely up and down without any sideways movement.

Lubricating the feed travel
The feed travel should be lubricated periodically with grease to ensure smooth operation.

- Raise the motor unit to the highest position possible;
- Lubricate the dove-tail guideway at both sides;
- Lubricate the gear rack.

After repeated use, the gear rack may become loose. If necessary, adjust the five self-locking set screws at the left side. Tighten screws in series until the gear rack moves freely in the dove-tail guideway but does not allow the motor to wobble.

Repair, modification and inspection
Repair, modification and inspection of Euroboor Magnetic drilling machines must be done by Euroboor or an Euroboor authorised dealer. The spare parts list will be helpful if presented with the machine to the Euroboor dealer for service when requesting repair or other maintenance.

Euroboor machines are constantly being improved and modified to incorporate the latest technological advancements. Accordingly, some parts (i.e. part numbers and/or design) may be changed without prior notice. Also, due to Euroboor's continuing program of research and development, the specifications of machines are subject to change without prior notice.



WARNING: *Since accessories, other than those offered by Euroboor, have not been tested with this machine, use of such accessories with this tool could be hazardous. To reduce the risk of injury, only Euroboor recommended accessories should be used with this machine.*

Consult your dealer for further information on the appropriate accessories.

7. Trouble shooting

Magnet and motor do not function	- The magnet switch is not connected to the power supply - Damaged or defective wiring - Defective fuse - Defective magnet switch - Defective control unit - Defective power supply
Magnet does function, the motor does not work	- Damaged or defective wiring - Carbon brushes are stuck or worn out - Defective magnet switch - Defective On / Off switch - Defective control unit - Defective armature and/or field
Magnet does not function, the motor does	- Defective magnet - Defective wiring of magnet - Defective control unit
Annular cutters break quickly; holes are bigger than the annular cutter	- Clearance in the guide - Bent spindle - Shaft extending from the motor is bent - Bent pilot pin
Motor running roughly and/or seizing up	- Bent spindle - Shaft extending from the motor is bent - Triangular guide not mounted straight - Dirt between spindle and triangular guide
Motor starts running when magnet switch is turned on	- Damage or defective relay in control unit
Motor making a rattling sound	- Gear ring (bottom of the armature) worn out - Gear(s) worn out - No oil in gearbox
Motor humming, big sparks and motor has no force	- Armature damaged (burned) - Field burned - Carbon brushes worn out
Motor does not start or fails	- Damaged or defective wiring - Dirt in sensor control unit - Defective or loose magnet on top of armature - Damaged or defective (sensor) control unit - Damage to armature or field coil - Damaged or defective carbon brushes
Guiding takes a great deal of effort	- Guide is set too tight - Guide is dry, needs to be greased - Guide/gear- rack/rotation system dirty or damaged
Insufficient magnetic force	- Damaged or defective wiring - Bottom of magnet not clean and dry - Bottom of magnet not flat - Workpiece is not bare metal - Workpiece is not clean or flat - Workpiece is less than 6 mm (too thin) - Defective control unit - Defective magnet

Frame under voltage	- Damaged / defective wiring - Defective magnet - Motor seriously dirty
Fuse blows when magnet switch is turned on	- Damaged or defective wiring - Wrong value fuse - Defective magnet switch - Defective control unit - Defective magnet
Fuse blows when motor is started	- Damaged or defective wiring - Wrong value fuse - Motor running roughly - Defective armature and / or field - Carbon brushes worn out - Defective control unit
Rotation system free stroke too long	- Loose or defective gear rack - Defective rotation system

8. Exploded views & spare parts list

8.1 Exploded views

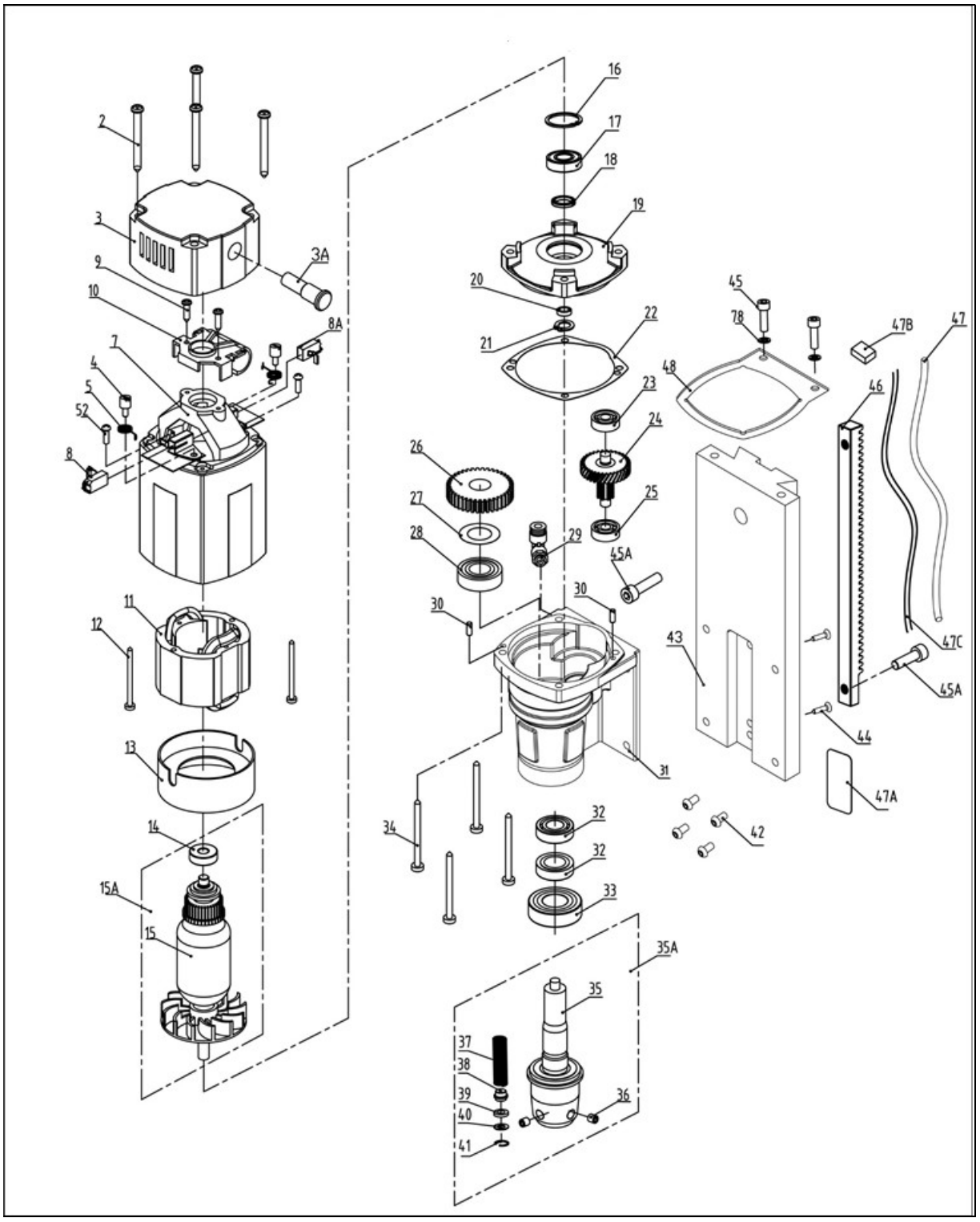

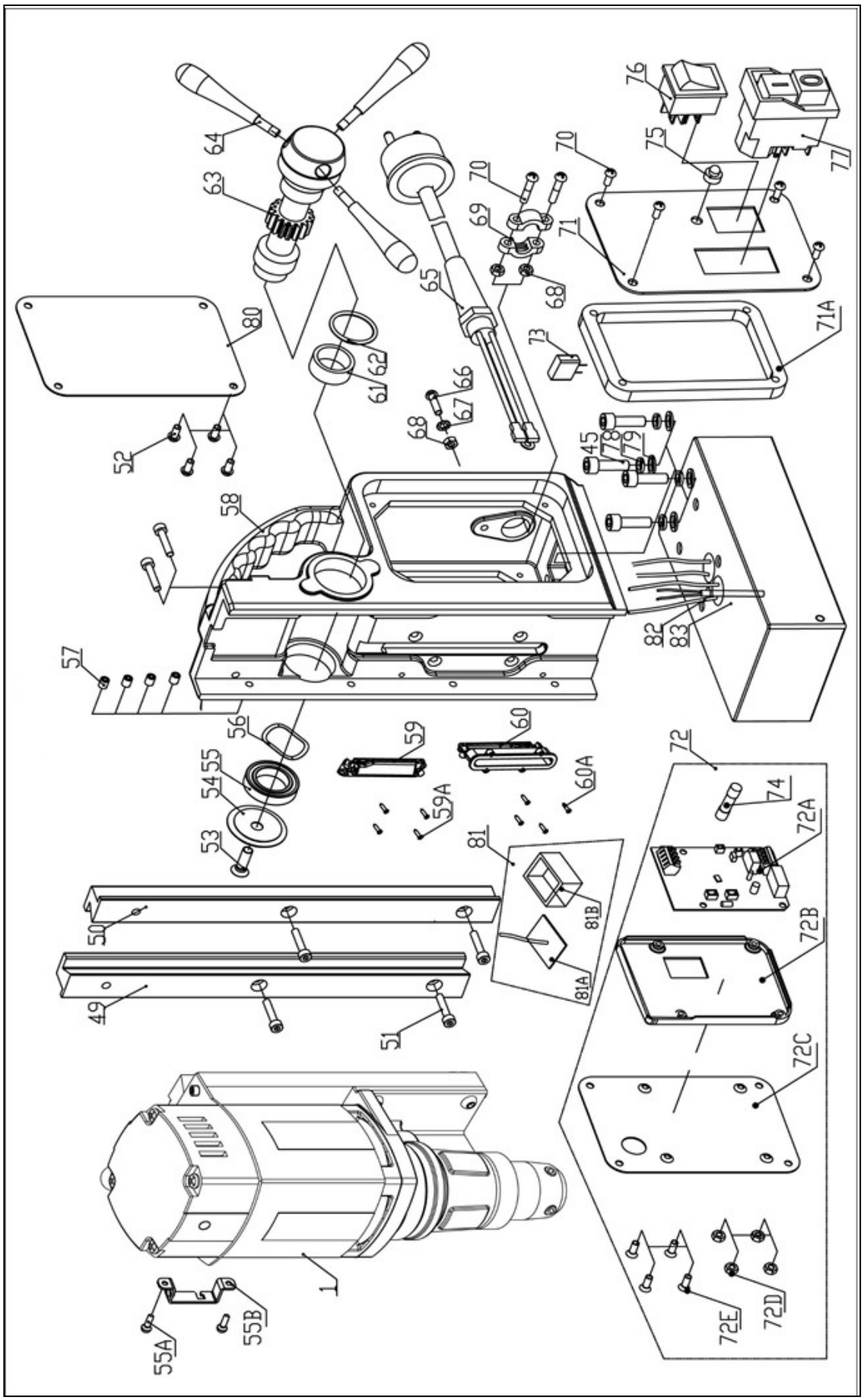

1
45
49
50
51
52
53
54
55
55A
55B
56
57
58
59
59A
60
60A
61
62
63
64
65
66
67
68
69
70
71
71A
72
72A
72B
72C
72D
72E
73
74
75
76
77
78
79
80
81
81A
81B
82
83

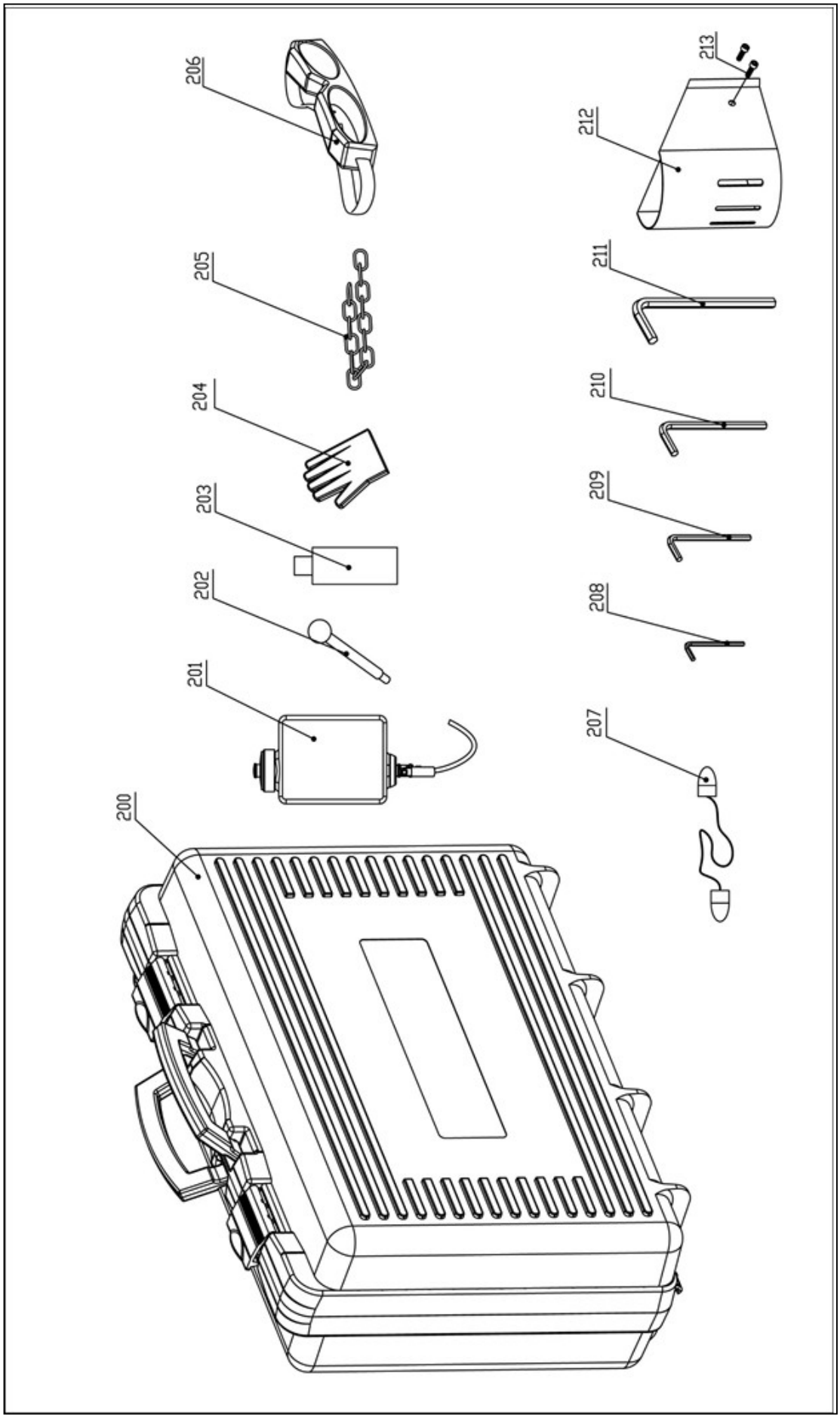
206
205
204
203
202
201
200
213
212
211
210
209
208
207

8.2 Spare parts list

No.	Part no.	Description	Qty
1	040S+.1001	ECO.40S+ motor unit 220V int. cable	1
	040S+.1001A	ECO.40S+ motor unit 110V int. cable	
2	036.0043	Torx screw M4.8 x 55	4
3	040S.0022	End cover	1
3A	020.0278	Led indicator red alarm 110 - 220 Volt	1
4	032.0136	Screw for spring	2
5	032.0141-1	Spring	2
7	040S.1012	Motor housing	1
8	032.0146	Carbon brush set 220V	1
	032.0147	Carbon brush set 110V	
8A	032.0146AUTO	Carbon brush 110 - 220 Volt	1
9	032.0116	Screw M4 x 16	2
10	032.0131-1	Adapter ring cap	1
11	040S.0276	Field 220V	1
	040S.0277	Field 110V	
12	020.0024	Screw M4 x 60	2
13	032.0161	Baffle	1
14	032.0126	Bearing 608ZZ 8 x 22 x 7	1
15A	040S.1011	Armature set 220V	1
	040S.1011A	Armature set 110V	
16	032.0166	Circlip 472/28/1.2	1
17	050.9070	Bearing 6001V V	1
18	050.0064	Oil bearing 15 x 21 x 3	1
19	040S.0236X	Inner gear plate	1
20	040S.0065	Rotor iron seal	1
21	020.0308	Circlip	1
22	040S.0128	Gasket	1
23	032.0221	Bearing 608 8 x 22 x 7	1
24	360.1013	Bevel gear assembly	1
25	020.0636	Bearing	1
26	360.1014	Spindle gear	1
27	032.0191	Adapter ring 17 x 24 x 0.2	1
28	032.0196	Bearing 6003 17 x 35 x 10	1
29	KSP.S	Coolant connector Quick (blue ring)	1
30	050.0025	Pin 4 x 10	2
31	040S.0008	Gear box	1
32	030E.5033	Seal	2
33	030E.5034	Bearing nsk 6004 ddu	1
34	050.0106	Screw 4.8 x 45	4
35A	030E.5035	Spindle inc. spring set	1
36	020.0136	Grub screw M8 x 8	2

No.	Part no.	Description	Qty
37	030E.5037	Spring set	1
38			
39			
40			
41			
42	020.0471	Screw	4
43	040S.0024	Slide 219 mm	1
44	020.0309	Screw	2
45	020.0156	Bolt M6 x 20	6
45A	020.0106	Screw M6 x 14	2
46	040S.0025	Joint 1.5*21T	1
47	040S.0017	Spring sleeve 250 x 8.5 x 0.6	1
47A	040S.0029	Cover 74 x 15 x 1.5	1
47B	040S.0028	Connector PCT-222 (SPL-2)	1
47C	040S.0016	Two-core cable 410 x 6.8	1
48	040S.0041	Top-fixing-plate	1
49	P040S.0193D	Rail set aluminium (R/L)	1
50			
51	020.0063	Screw M5 x 20	6
52	020.0101	Panel screw BKVZ M4x8	10
53	020.0081	End screw BKVZ M6 x 16	1
54	050.0030	Ender cover Ø36 X 3	1
55	050.0063	Bearing 6804 ZZ	1
55A	020.0063	Screw M5 x 20	2
55B	020.0289	Tank holder	1
56	040.0023	Washer	1
57	020.0056/S	Screw SS M5 x 6	4
58	040S.0012	Frame	1
59	040S.0014	Cover	1
59A	040S.0026	Screw	4
60	040S.0013	Cable box	1
60A	020.0329	Screw M4 x 16	4
61	032.0127A	Bearing 110 - 220 Volt	1
62	030.0027	Washer	1
63	020.0061/Z	Capstan hub assembly	1
64	020.0315	Arm for capstan	3
65	020.0036	Main cable 220V EU	1
	020.0036/AU	Main cable Australia	
	020.0036/UK	Main cable UK 220v	
	020.0036/UK 110-16A	Main cable UK 110v 16A	
	020.0036/USA	Main cable USA	
	020.0031	Coupling nut PG11 (main cable)	1
66	020.0182	Grounding screw/washer/nut	1
67			
68			

No.	Part no.	Description	Qty
68	020.0037	Cable clamp complete	1
69			
70			
71	040S.0015	Front panel ECO.40S+	1
71A	032T.0009	Spacer	1
72	032.1008Z	Control unit 110-220V 3 pins	1
73	020.0257	Capacitance	1
74	020.0017	Fuse 5 x 20 F2A	1
75	020.0206	LED indicator set	1
76	020.0011-1	Magnet Switch	1
77	030E.0091/Y	Motor switch 220V (5-pin) YELLOW	1
	030E.0092/Y	Motor switch 110V (5-pin) YELLOW	
78	020.0111	Washer M6 DIN7980	6
79	020.0112	Washer M6	4
80	PP.RSEU-220	Rear Panel EB 220V	1
	PP.RSEU-110	Rear Panel EB 110V	
81	055.1041	Gyroscope PCB set	1

No.	Part no.	Description	Qty
82	100.1008	Sensor	1
83	040S.1022	Magnet 220 Volt	1
	040S.1022A	Magnet 110 Volt	
200	040S+.2010	Case ECO.40S+ with sticker	1
201	KSP.Q2	Coolant tank Quick Connect 2015	1
202	KSP.P	Pin and knob for cooling tank	1
203	IBO.0.2L	Bottle 0.2LTR	1
204	SAF.300	Protective gloves	1
205	SAF.400	Safety chain (1 mtr) with lock	1
206	SAF.100	Safety goggles	1
207	SAF.200	Ear plugs	1
208	IMB.US2.5	Allen key 2.5 mm	1
209	IMB.US3	Allen key 3.0 mm	1
210	IMB.US4	Allen key 4.0 mm	1
211	IMB.US5	Allen key 5.0 mm	1
212	SAF.MDMS	Safety guard small	1
213	020.0223	Screw M5 x 10	2
	IBO.G101	Gearbox oil	1

8.3 Wiring diagram

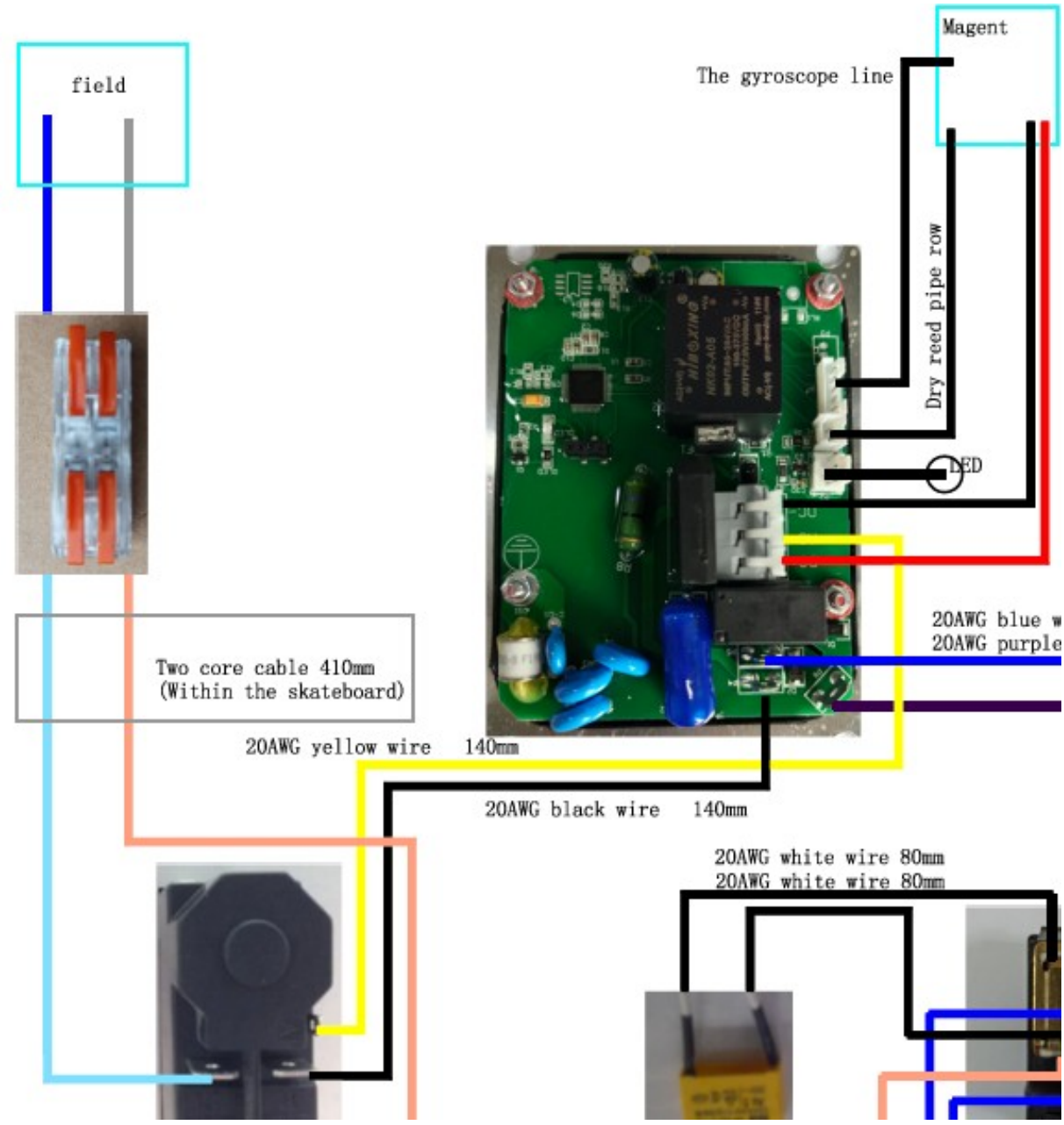

`

8.4 Warranty and service

Warranty

Euroboor B.V. warrants this magnetic drilling machine to be free of material defects and workmanship errors under normal use for a period of 12 months after date of purchase.

This 12-month period can be extended to 24 months in total by registering the product on our website: https://www.euroboor.com/int-en/support/register-your-machine/

Serial number:	
Date of purchase:	/ /

Service

To maximise the lifetime of your EUROBOOR machine always use service and parts from an official EUROBOOR distribution channel. Whenever in need of such, always contact original point of sales or if no longer existent the distributor of EUROBOOR products in your country.