Operators manual

V 1.4 EN October 2026

EUROBOOR

FOR PROFESSIONALS BY PROFESSIONALS

Bevelling machine

B60 / B60S

Congratulations on the purchase of your EUROBOOR B60(S) portable bevelling machine. At EUROBOOR we strive to exceed our customers' expectations by developing and providing premium and innovative portable drilling and cutting solutions. We believe that a professional like you must be able to rely on a professional supplier. Which has led us to become a major player in the industrial world, with our own factory and several offices worldwide. All because we have always listened to our customers and to the demands from the market.

Our vision is focused on developing innovative portable tools that add value for our customers and facilitate them in their daily work. We never lose sight of sustainability, time savings and cost savings.

Enjoy your new machine!

Before operating your bevelling machine, please read all instructions first. These include the Operators Manual and warning label on the unit itself. With proper use, car and maintenance your model will provide you with years of effective bevelling performance.

TO REDUCE THE RISK OF INJURY USER MUST READ AND UNDERSTAND ALL INSTRUCTIONS

To view all our offices and their contact information please visit: www.euroboor.com

The original manual has been produced in the English language. If any discrepancies should occur in translations, reference must be made to the original version for clarification.

Table of contents

1. Safety....4

1.1 General safety instructions....4
1.2 Specific safety information....7

2. Description....10

2.1 Intended use....10
2.2 Description and features....10
2.3 Box contents....13
2.4 Serial number....13
2.5 Technical data....14
2.6 Symbols....15
2.7 Environmental....16

3. Preparation & adjustment....17

3.1 Assembly....17
3.2 Prior to use....17
3.3 Cutting blade installation & indexing....18
3.4 Replacing milling head....21
3.5 Setting bevel angle....22
3.6 Setting bevel depth/width....23
3.7 Conversion for use on pipe....25

4. Using the machine....27

4.1 Switching machine into standby mode....27
4.2 Switching motor on and off....27
4.3 Speed adjustment....28
4.4 Overload protection....28

5. Working with operating tools....30

5.1 Bevelling plate material....30
5.2 Facing plate material....32
5.3 Bevelling pipe material....34

6. Maintenance....37

7. Trouble shooting....39

8. Exploded view & spare parts list....40

8.1 Exploded views....40
8.2 Spare parts list....44
8.3 Wiring diagrams....46

9. Warranty and service....48

10. Certifications....49

1. Safety

1.1 General safety instructions

WARNING: *When using the bevelling machine, basic safety precautions should always be followed to reduce the risk of fire, electric shock and personal injury.*

READ AND UNDERSTAND ALL SAFETY INFORMATION AND INSTRUCTIONS.
Failure to follow the warnings and instructions may result in electric shock, fire and/or serious injury.

SAVE ALL WARNINGS AND INSTRUCTIONS FOR FUTURE REFERENCE.
The term "power tool" in the warnings refers to your mains-operated corded power tool.

Please also observe the relevant national industrial safety regulations. Non-observance of the safety instructions in the said documentation can lead to an electric shock, burns and/or severe injuries.

This Operator's Manual including the "General Safety Instructions" should be kept for later use and enclosed with the power tool, should it be passed on or sold.

WORK AREA SAFETY

1. Keep your work area clean and well lit. Cluttered benches and dark areas increase the chance of accidents;
2. Do not operate power tools in explosive atmospheres, such as in the presence of flammable liquids, gases or dust. Power tools create sparks which may ignite the dust or fumes.
3. Keep bystanders, children, and visitors away while operating a power tool. Distractions can cause you to lose control.

ELECTRICAL SAFETY

DANGER

1. Power tool plugs must match the outlet. Never modify the plug in any way. Do not us any adapter plugs with earthed (grounded) power tools. Unmodified plugs and matching outlets will reduced risk of electric shock.
2. Avoid body contact with grounded surfaces such as pipes, radiators, ranges and refrigerators. There is an increased risk of electric shock if your body is earthed or grounded.
3. Do not expose power tools to rain or wet conditions. Water entering a power tool will increase the risk of electric shock.
4. Do not abuse the cord. Never use the cord to carry the power tool or pull the plug from an outlet. Keep cord away from heat, oil, sharp edges or moving parts. Replace damaged cords immediately. Damaged cords increase the risk of electric shock.
5. When operating a power tool outdoors, use an extension cord suitable for outdoor use. Use of a cord suitable for outdoor use reduces the risk of electric shock.
6. If operating a power tool in a damp location is unavoidable, use a residual current device (RCD) protected supply. Use of an RCD reduces the risk of electric shock.

PERSONAL SAFETY

WARNING: *Wear ear and eye protection when using this power tool.*

1. Stay alert, watch what you are doing and use common sense when using a power tool. Do not use machine while tired or under the influence of drugs, alcohol, or medication. A moment of inattention while operating power tools may result in serious personal injury.
2. Use personal protective equipment. Always wear eye protection. Protective equipment such as dust mask, non-skid safety shoes, hard hat, or hearing protection used for appropriate conditions will reduce personal injuries.
3. Prevent unintentional starting. Ensure switch is in the off-position before connecting to power source and/or battery pack, picking up or carrying tool. Carrying power tools with your finger on the switch or energising power tools that have the switch on invites accidents.
4. Remove any adjusting key or wrench before turning the power tool on. A wrench or a key that is left attached to a rotating part of the power tool may result in personal injury.
5. Do not overreach. Keep proper footing and balance at all times. This enables better control of the power tool in unexpected situations.
6. Dress properly. Do not wear loose clothing or jewellery. Keep your hair, clothing, and gloves away from moving parts. Loose clothes, jewellery, or long hair can be caught in moving parts.

7. If devices are provided for the connection of dust extraction and collection facilities, ensure these are connected and properly used.
8. Never place hands, fingers, gloves or clothing near cutting area or rotating machine parts.

POWER TOOL USE AND CARE

1. Do not force the power tool. Use the correct power tool for your application. The correct power tool will do the job better and safer at the rate for which it was designed.
2. Do not use the power tool if the switch does not turn it on or off. Any tool that cannot be controlled with the switch is dangerous and must be repaired.
3. Disconnect the plug from the power source and/or the battery pack from the power tool before making any adjustments, changing accessories, or storing power tools. Such preventive safety measures reduce the risk of starting the power tool accidentally.
4. Store power tools out of the reach of children and do not allow person unfamiliar with the power tool or these instructions to operate the power tool. Power tools are dangerous in the hands of untrained users.
5. Maintain power tools. Check for misalignment or binding of moving parts, breakage of parts, and any other condition that may affect the power tool's operation. If damaged, have the tool serviced before use. Many accidents are caused by poorly maintained tools.
6. Keep cutting tools sharp and clean. Properly maintained tools, with sharp cutting edges are less likely to bind and are easier to control.
7. Use the power tool, accessories and tool bits, etc. in accordance with these instructions, taking into account the working conditions and the work to be performed. Use of the power tool for operations different from those intended could result in a hazardous situation.
8. Use only accessories that are recommended by EUROBOOR for your power tool. Accessories that may be suitable for one machine, may become hazardous when used on another power tool.

SERVICE

1. Power tool service must be performed only by qualified repair personnel. Service or maintenance performed by unqualified personnel could result in risk of injury.
2. When servicing a power tool, use only identical replacement parts. Follow instructions in the maintenance section of this manual. Use of unauthorised parts or failure to follow maintenance instructions may create a risk of electric shock or injury.

1.2 Specific safety information

1. ELECTRICAL SAFETY

DANGER: *Electrical voltage! Risk of fatal injury due to electrical shock!*

a) Grounded tools must be plugged into an outlet properly installed and grounded in accordance with all codes and ordinances. Never remove the grounding prong or modify the plug in any way. Do not use adaptor plugs. Check with a qualified electrician if you are in doubt whether the outlet is properly grounded. If the tools should electrically malfunction or break down, grounding provides a low resistance path to carry electricity away from the user
b) When operation the tool outside, use an outdoor extension cord market “W-A” or “W”. These cords are rated for outdoor use and reduce the risk of electric shock
c) Extension cables must have a sufficient cross-section so as to prevent an excessive drop in voltage, or overheating. An excessive drop in voltage reduces the output an can lead to failure of the motor
d) Never use multiple extensions cables together. Use a single longer one instead
e) Check the plug, cable and machine for damage each time using the machine
f) Remove the plug from the plug socket before undertaking an maintenance work on the power tool

2. PERSONAL SAFETY

a) Check the plug, cable and machine for damage each time using the machine
b) Remove the plug from the plug socket before undertaking an maintenance work on the power tool

WARNING: *Risk of injury from high-temperature chips.*

c) Never touch the tool holder and keep all vulnerable body parts clear while the machine is running, as high-temperature chips are expelled at high speed during operation
d) During operation, always guide the machine in a direction away from the body
e) Do not use the machine above your head

WARNING: *Risk of injury to hands.*

f) Do not reach into the processing line with your hands
g) Use both hands to hold and operate the machine

WARNING: *Dust created by bevelling may harm your health.*

h) Some types of dust, such as dust from lead-based paint, is known to cause cancer, birth defects or other reproductive harm. Risk varies on exposure and should always be reduced by working in a well-ventilated area and by making use of approved safety equipment, such as dust masks specifically designed to filter out microscopic particles

WARNING: *Never machine materials which contain asbestos.*

i) Only use recommended square carbide inserts ("cutting plates"), rated at the machine's maximum cutting rate or higher
j) Do not use dull or damaged cutting plates to prevent excessive friction and load, and thus to prevent damage to and failure of the machine
k) Maintain labels and identification plates, as they carry important information. If unreadable or missing, obtain replacement

3. TOOL USE AND CARE

WARNING

a) Hold power tool by insulated gripping surfaces, because the cutter may contact its own cord. Cutting a "live" wire may make exposed metal parts of the power tool "live" and shock the operator

WARNING

b) Use clamps or another practical way to secure and support the workpiece to a stable platform. Holding the work by your hand or against the body leaves it unstable and may lead to loss of control.

4. RESIDUAL RISKS

In spite of the application of the relevant safety regulations and the implementation of safety devices, certain residual risks cannot be avoided.

These are:

- Impairment of hearing
- Risk of personal injury from flying particles
- Risk of burns due to accessories becoming hot during operation
- Risk of personal injury due to prolonged use.

Always try to reduce these risks as much as possible.

2. Description

2.1 Intended use

This shape bevelling, chamfering and deburring tool is an electrically driven portable machine for machining workpieces in steel, chrome steel alloys, aluminium, aluminium alloys, brass and plastic. The machine is designed exclusively for adding bevelled edges, rounding off edges, removing burrs, removing sharp corners and chamfering faces on workpieces. The speed of the machine is variable (B60S only) to suit the needs of various materials and is equipped with a graduated depth adjustable deck. It comes standard with a milling head including 10 square indexable cutter inserts ("cutting plates") to achieve quick and easy bevelling.

WARNING: *The machine should not be converted or modified, e.g. for any other form of use, other than as specified in these operating instructions. Warranty will be voided and the user shall be liable for damages and accidents due to incorrect use.*

2.2 Description and features

Please refer to [image 2-1], [image 2-2], [image 2-3] and [image 2-4] for the following key elements of the machines B60 and B60S.

1. Milling head cover
2. Guide plate assembly
3. Guide rollers
4. Serial number plate
5. Depth adjustment lock handle
6. Angle adjustment scale
7. Angle adjustment lock bolt
8. Depth adjustment scale
9. Positioning and operating handles
10. Depth adjustment knob
11. Milling head
12. Motor on/off switch
13. Motor check indicator light (green)
14. Overload indicator light (red)
15. Standby on/off switch
16. Motor start switch
17. Motor stop switch
18. Speed adjustment knob

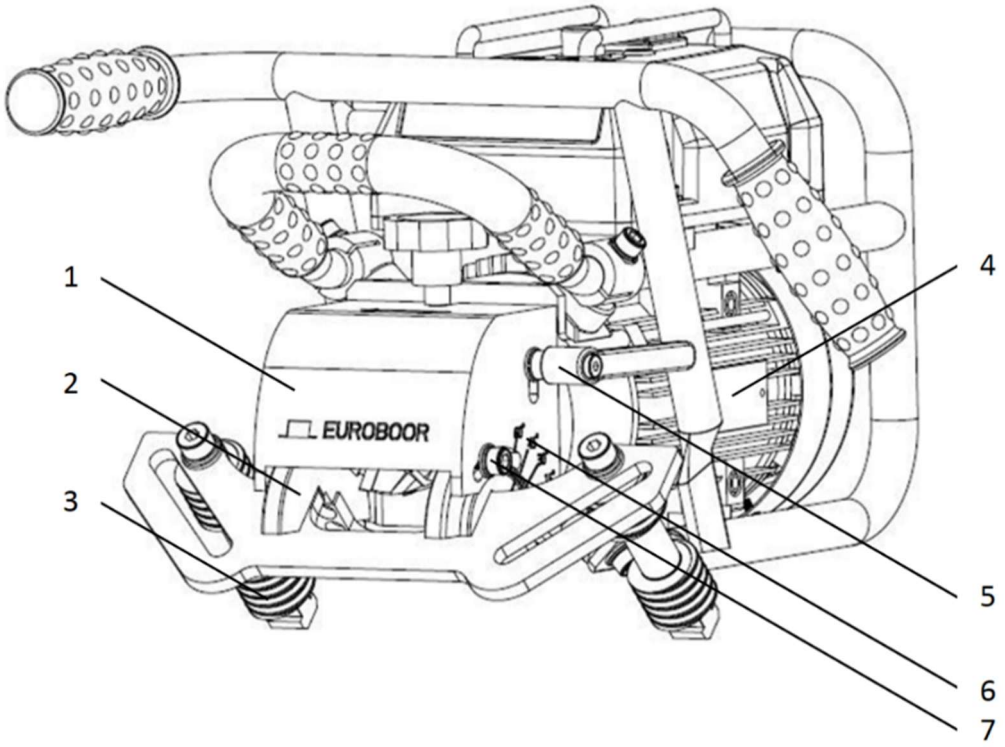

[image 2-1] B60S front right perspective

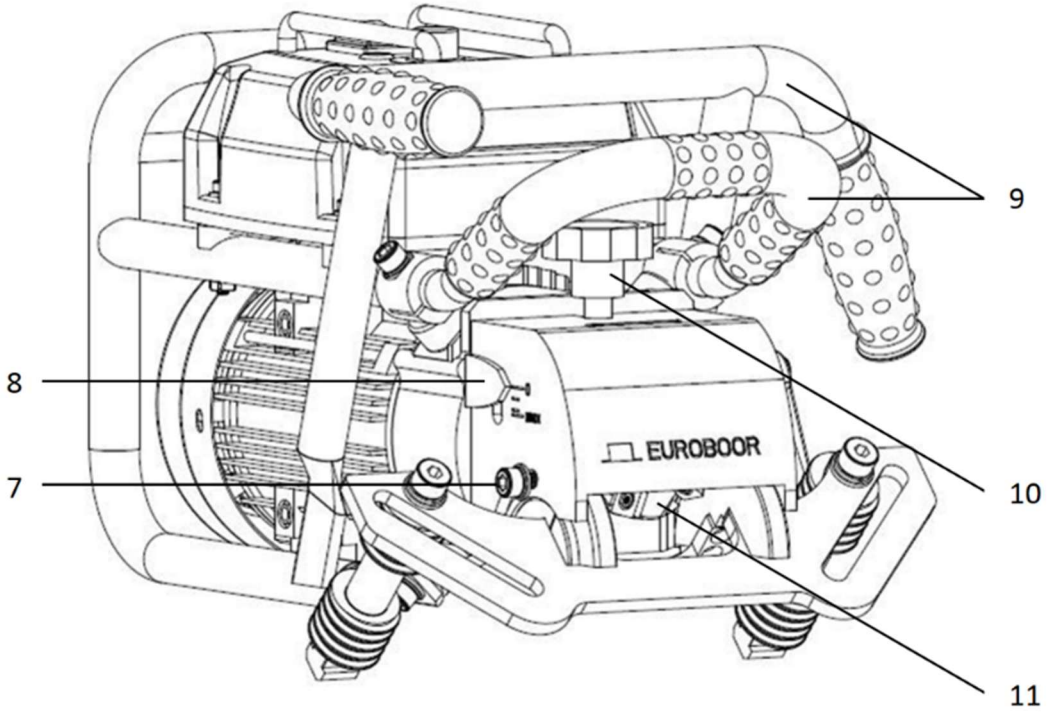

[image 2-2] B60S front left perspective

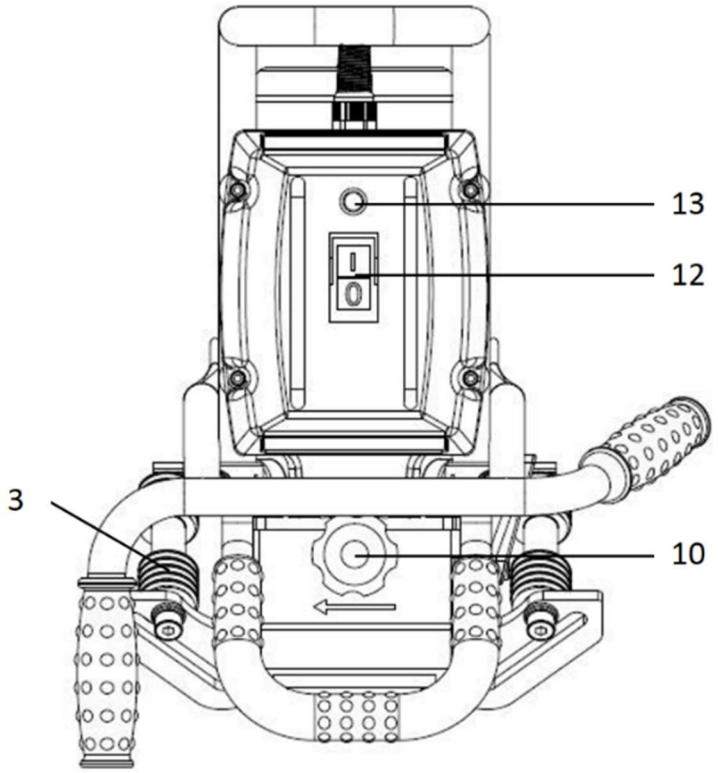

[image 2-3] B60 top view

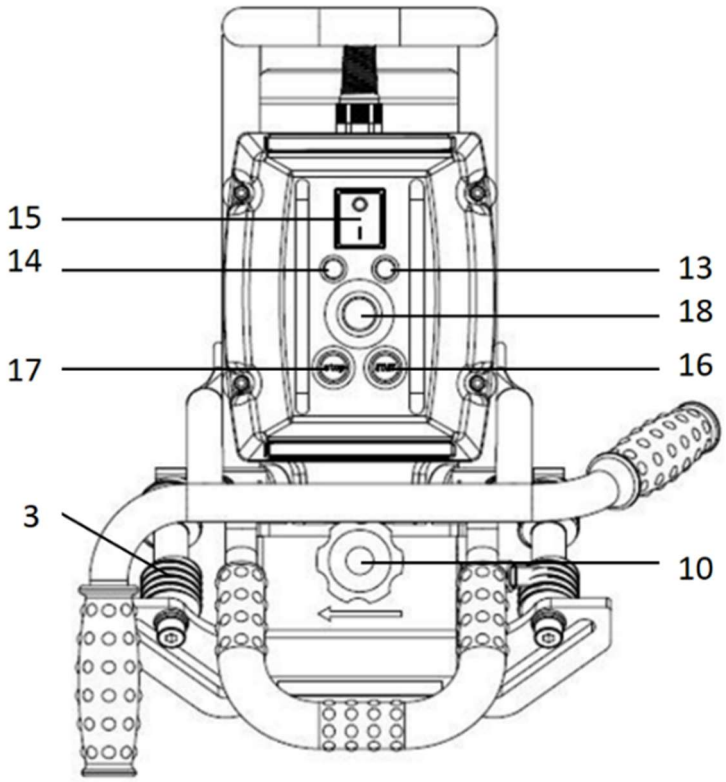

[image 2-4] B60S top view

2.3 Box contents

Note: *When unpacking, make sure the parts listed below are included. If missing or broken, please contact distributors as soon as possible.*

1 x Carrying case

1 x Bevelling machine

1 x Instruction manual

3 x Allen keys 4, 6, 8 mm (3/16", 1/4", 5/16")

1 x Torx key (T20)

2 x Open spanners 18, 32 mm (11/16", 1 1/4")

1 x Set of ear plugs

1 x Pair of safety glasses

1 x Pair of gloves

1 x Tool box

2.4 Serial number

The serial number is mentioned on the machine once: engraved on a plate on the side of the motor. The serial number is also mention on the machine case once: on a sticker on the motor housing. Additional serial number stickers are provided with the machine for your administration.
The serial number will help you and your sales point validate and identify the machine.

As example:

B6021090001

breaks down to:

B60	*21*	*09*	*0001*
Machine series	Year of manufacture	Month of manufacture	Identification number

Maintain labels, nameplates and other machine identification. These carry important information. Obtain replacements when unreadable or missing.

2.5 Technical data

B60

Weight nett (machine)	24.1 kg	53 lbs
Weight gross (incl. case & acc.)	34.0 kg	75 lbs
Motor power	1,100W	10.0 A
Spindle speed	2,850 min^{-1}	
Edge angle	0° - 60°	
Maximum bevel width	24 mm	15/16"
Pipe application (Ø OD)	150 mm – 1,300 mm	5 15/16" - 51 3/16"
Tooling	Integrated milling head with 10 square inserts (LKS.15)	
Power source	220-240V 50-60Hz	110-120V 60Hz

B60S

Weight nett (machine)	24.1 kg	53 lbs
Weight gross (incl. case & acc.)	34.0 kg	75 lbs
Motor power	1,800W	16.4 A
Spindle speed	1,675-2,850 min^{-1}	
Edge angle	0° - 60°	
Maximum bevel width	24 mm	15/16"
Pipe application (Ø OD)	150 mm – 1,300 mm	5 15/16" - 51 3/16"
Tooling	Integrated milling head with 10 square inserts (LKS.15)	
Power source	220-240V 50-60Hz	110-120V 60Hz

2.6 Symbols

Symbol	Term, meaning	Explanation
	Read documentation	Be absolutely sure to read the enclosed documentation such as the Instruction Manual and the General Safety Instructions
	Wear ear protection	Use ear protection during operation
	Wear eye protection	Use eye-protection during operation
	Dangerous electrical voltage	Be sure the machine is safe for use, without any open and/or protruding wires
	Cutting hazard	Be careful when handling the machine
	Danger/warning/caution	Observe the information in the adjacent text!
	European conformity symbol	Confirms the conformity of the power tool with the directives of the European Community
	Electromagnetic Compatibility	Able to function acceptably in its electromagnetic environment.
	International Electrotechnical Commission	Conformity with international electrotechnical safety standards
	UL	Certified by Underwriters Laboratories (UL), a recognised laboratory for safety testing approved by US federal agency OSHA
	ISO9001	Certified in accordance with ISO9001:2015 quality management system.
	Class of protection I	Product with basic insulation and exposed (touchable), conductive parts additionally connected to the protective earth conductor
mm	Millimetre	Unit of measure for the dimensions
"	Inch	Unit of measure for the dimensions

kg	Kilogram	Unit of measure for the mass
lbs	Pound	Unit of measure for the mass
V	Volt	Unit of measure for the electric voltage
A	Ampere	Unit of measure for the electric current intensity
W	Watt	Unit of measure for the output
N	Newton	Unit of measure for the force
min	Minutes	Unit of measure for the time
1/min	Per minute	Unit of measure for number of revolutions, strokes, impacts or oscillations per minute

2.7 Environmental

Separate collection. This product must not be disposed of with normal household waste.

Separate collection of used products and packaging allows materials to be recycled and used again. Re-use of recycled materials helps prevent environmental pollution and reduces the demand for raw materials.

Local regulations may provide for separate collection of electrical products from the household, at municipal waste sites or by the retailer when you purchase a new product.

3. Preparation & adjustment

3.1 Assembly

EUROBOOR B60(S) comes completely pre-assembled and does not require any additional assembly. It is however advised to check if the machine is complete and if all standard accessories are included before proceeding in any way.

WARNING: *Before undertaking any type of preparation, make sure the machine is switched off and the power supply is disconnected.*

3.2 Prior to use

Prior to any use, check the machine and all of its components for damage and check that all moving parts are in perfect working order and do not jam.

All parts must be correctly installed and must fulfil all conditions necessary to ensure perfect operation of the machine.

A damaged and/or incorrectly functioning machine must be repaired or replaced according the original specifications by EUROBOOR or any authorised EUROBOOR dealer or service point.

DO NOT use under wet conditions or in presence of flammable liquids or gases.

DO NOT let children come into contact with the machine. Supervision is required when inexperienced operators use this machine.

ELECTRICAL SAFETY

The machine electronics have been designed for one voltage only. Always check that the power supply corresponds to the voltage on the rating plate.

EUROBOOR B60(S) is designed in class I (grounded) according to standard EN 61029-1. Earth grounding is required.

If the power supply cord is damaged, it must be replaced by a specially prepared cord available through the EUROBOOR service organisation.

EXTENSION CABLE

If an extension cable is required, use an approved 3-core extension cable suitable for the power input of this tool (see technical data). The minimum conductor size is 1.5 mm²; the maximum length is 30 meter. When using a cable reel, always unwind the cable completely.

TRY A FEW SIMPLE PROJECTS USING SCRAP MATERIAL UNTIL YOU DEVELOP A "FEEL" FOR THE MACHINE.

LET THE MACHINE RUN IN FOR A PERIOD OF 8-10 HOURS BEFORE STARTING WITH BIG OPERATIONS.

DO NOT LOAD THE MACHINE TOO MUCH DURING RUN-IN PERIOD.

USE THE MACHINE ONLY WITHIN REASONABLE RANGE OF PARAMETERS AND NEVER USE THE MACHINE IN SERIOUS OVERLOAD.

KEEP THE MACHINE CLEAR FROM MOISTURE AT ALL TIMES TO PROTECT THE MACHINE, YOURSELF AND OTHERS.

3.3 Cutting blade installation & indexing

EUROBOOR B60(S) comes pre-assembled with 10 cutting blades. Operation of the machine wears the cutting blades out, and they need to be checked before every use. Work solely with sharp and undamaged cutting blades, as per EUROBOOR recommendation. There are multiple ways to ensure maximum performance of the cutting blades:

- Indexing the cutting blades by rotating the blades 90° in the tool holder, until all clean and sharp edges have been used and worn. This must be done in the exact same way for all 10 blades at the same time
- Swapping the inner and outer blades if only the overlapping corners show signs of wear, as to make maximum use of the unused edge corners
- Replacing the cutting blades if they are completely worn out or no longer suitable for the operating task at hand. All 10 blades need to be replaced at the same time

Following steps cover all above mentioned handlings.

3.3.1 Disassembly milling head cover

To access the milling head, it is advised to disassemble the milling head cover (including guide plates and rollers) from the machine. The following steps need to be taken:

1. Loosen the depth adjustment lock handle completely
2. Pull out the threaded rod (which has the bevelling depth indicator attached)
3. Gently pull off the complete milling head cover

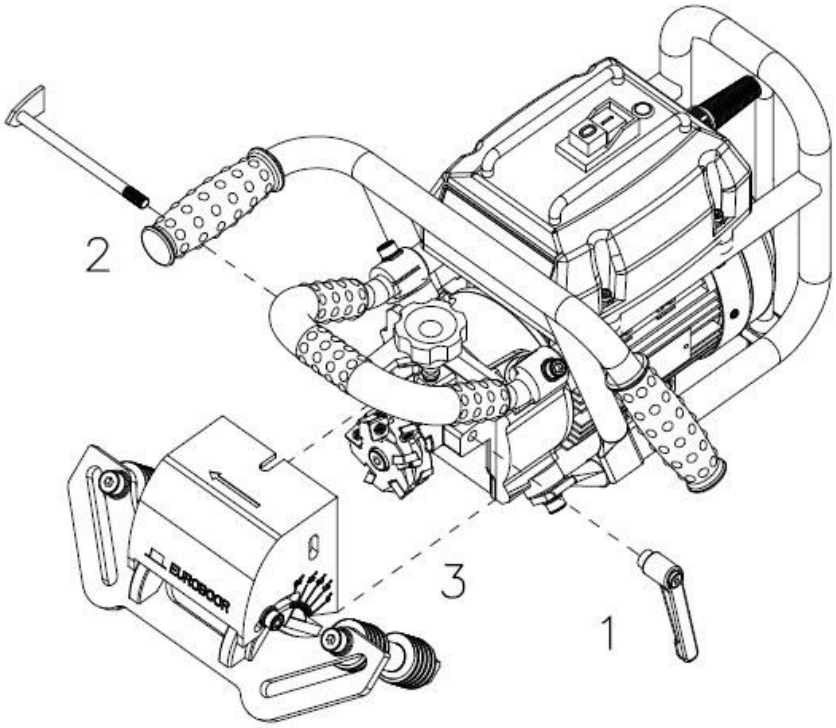

[image 3-1]

Reassembly of the milling head cover is done in reverse order. Be careful to reposition all components completely and without damaging them.

3.3.2 Removing and reinstalling cutting blade

With the milling head exposed it is possible to remove the cutting blades

1. Use supplied Torx T20 key to remove the set screw [image 3-2] and remove the cutting blade [image 3-3] from the milling head for the outer blades first.
2. With the outer blades removed, space is created to do the same for the inner blades
3. Clean the cutting blade sockets. This serves multiple purposes:
    a. When repositioning or replacing the cutting blades it should be prevented that dirt gets in the way of proper installation
    b. A clean milling head increases the life of the cutting blades
4. Reposition or replace the cutting blades as desired in exact reverse order. The set screws should not be overtightened. Make sure to remove all tools

WARNING:

- *Shortly after operating the machine, the milling head and cutting plates can be hot*
- *The cutting plates are sharp*
- *Wear appropriate hand protection*
- *Be careful not to damage the milling head and cutting plates*

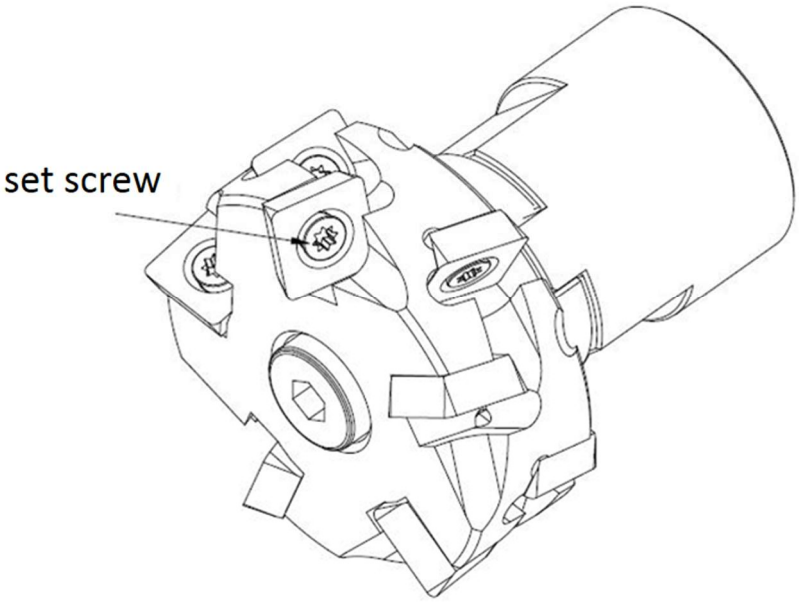

[image 3-2]

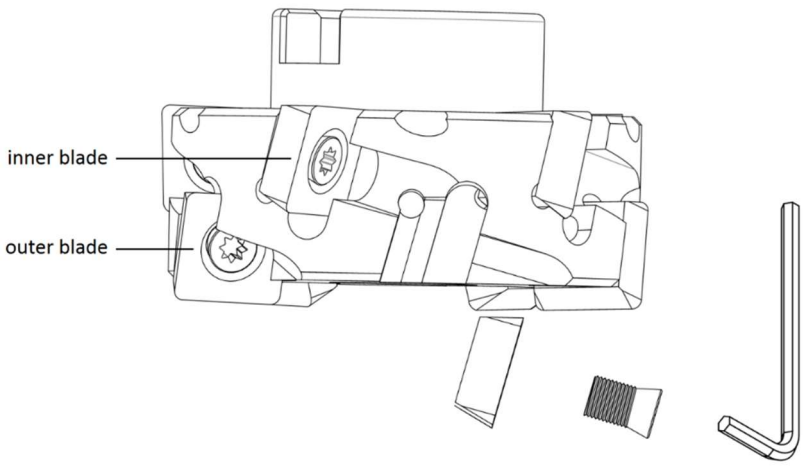

[image 3-3]

3.4 Replacing milling head

3.4.1 Disassembly milling head cover

See paragraph 3.3.1.

3.4.2 Removing and reinstalling milling head

1. Use supplied 32 mm (1 1/4") spanner to lock the motor spindle [image 3-4]
2. Use supplied 8 mm (5/16") Allen key to loosen and remove the securing bolt [image 3-4]
3. The milling head might be clamped tightly on the motor spindle. If the milling head does not come off easily by hand, use a pulley puller
4. For reinstallation, clean all parts first, and follow above steps in reverse order. Make sure all parts are positioned correctly and that the securing bolt is not overtightened. Make sure to remove all tools.

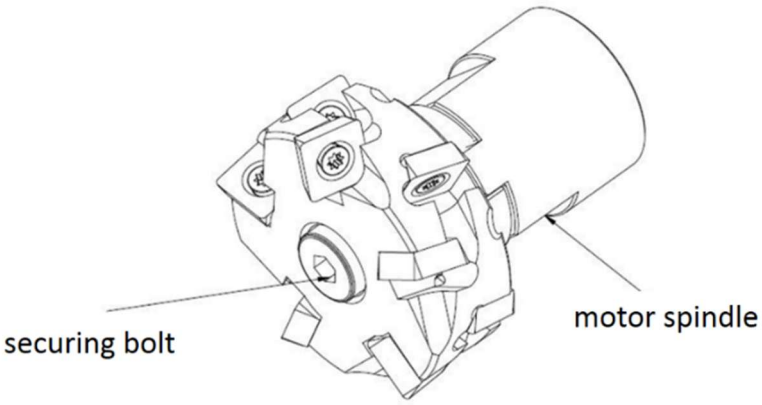

[image 3-4]

WARNING:

- *Shortly after operating the machine, the milling head and cutting plates can be hot*
- *The cutting plates are sharp*
- *Wear appropriate hand protection*
- *Be careful not to damage the milling head and cutting plates*

3.5 Setting bevel angle

EUROBOOR B60(S) provides stepless bevel angle adjustment, with a range from om 0° to 60° [image 3-5]. To set the required bevel angle:

1. Loosen both angle adjustment lock bolts with supplied 6 mm (1/4") Allen key. One can be found at either side of the milling head cover. It is not necessary to loosen the bolts completely.
2. Rotate the guide plate assembly in such a way, that the indicator stripe on the guide plate assembly lines up with the desired amount of degrees.
3. Tighten both angle adjustment lock bolts a little bit, double check if the angle adjustment is still set to the desired amount of degrees, and tighten the bolts completely. Be careful not to overtighten the bolts.

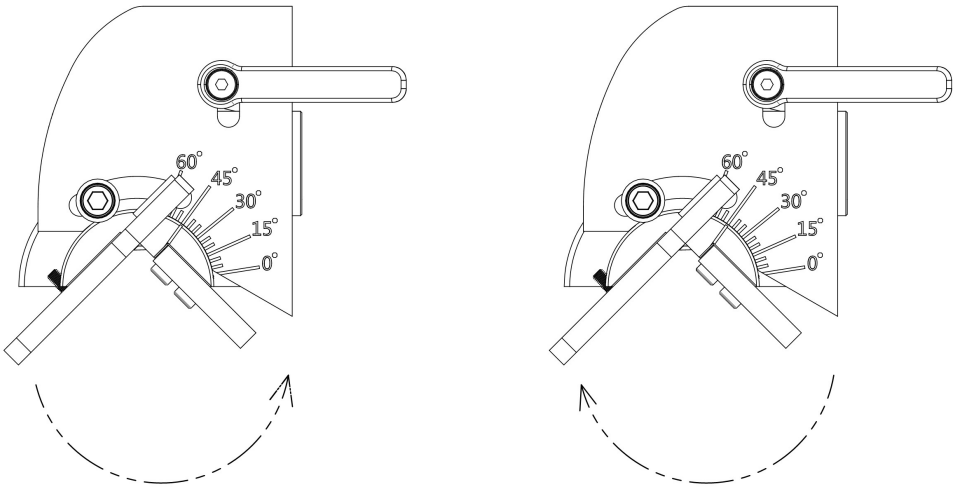

[image 3-5]

Note: set the bevel angle before setting the bevel depth!

3.6 Setting bevel depth/width

EUROBOOR B60(S) has a wide bevel depth/width adjustment range, up to 24 mm (15/16") bevel width at 45°.

Maximum bevel depth and width are different per bevel angle. Below you will find measurements for most common bevel angle settings [image 3-6].

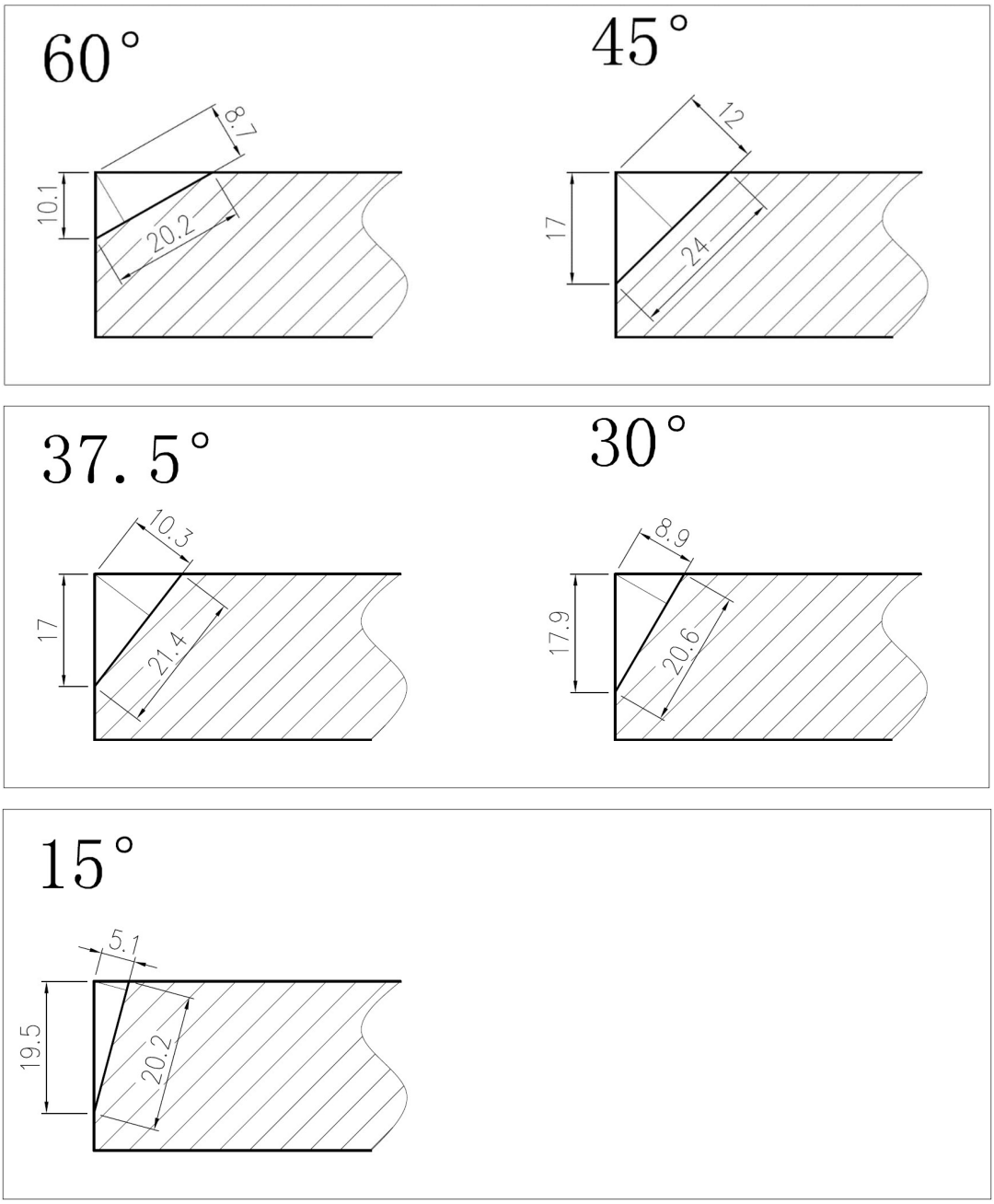

[image 3-6]

To set the required bevel depth:

1. Loosen the depth adjustment lock handle. It is not necessary to loosen it completely
2. Rotate the depth adjustment knob in counter-clockwise direction for bigger bevel width, or Rotate the depth adjustment knob in clockwise direction for smaller bevel width
3. Tighten the depth adjustment lock handle

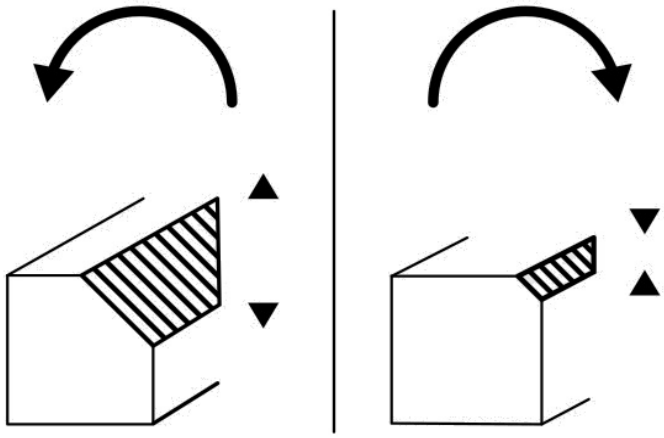

[image 3-7]

Note: The depth adjustment scale provides an indication of adjustment, but is specified for 45 ^{o} angle. Always check the setting by using the machine on a piece of scrap metal, and fine-tune the setting when needed.

3.7 Conversion for use on pipe

EUROBOOR B60(S) is equipped with a guide plate assembly that can be converted for use on pipe with an outer diameter range from 150 mm to 1300 mm (5 15/16" - 51 3/16”).

WARNING: *This bevelling machine has the technical ability to bevel pipes with a diameter up to 1300 mm. However, keeping the machine stable will require more attention when bevelling pipes with an outer diameter of more than 300 mm. Not paying enough attention will increase the risk of accidents.*

This requires a conversion of the machine which is done in the following steps:

1. Loosen and remove both angle adjustment lock bolts with supplied 6 mm (1/4") Allen key. One can be found at either side of the milling head cover.
2. Pull the complete guide plate assembly from the machine.
3. Rotate the guide plate assembly 180°.
4. Reposition the guide plate assembly.
5. Fit and tighten both angle adjustment lock bolts.

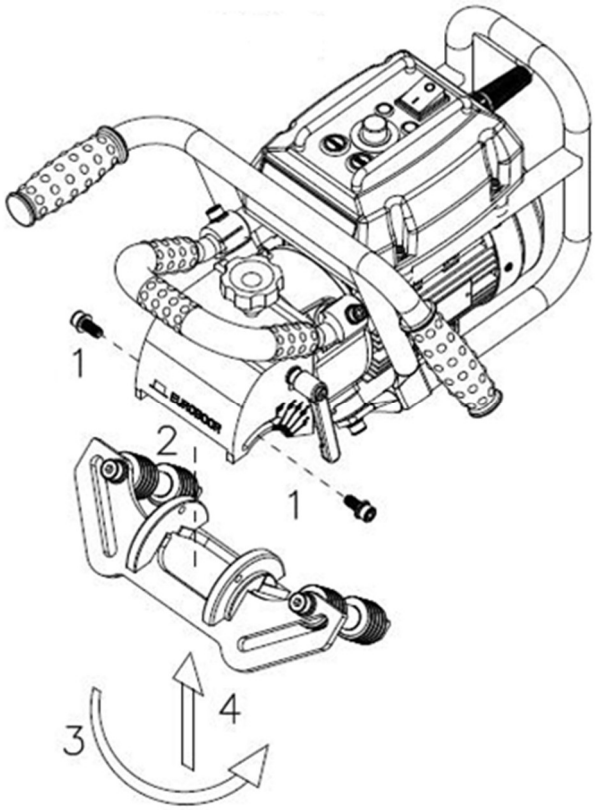

[image 3-8]

6. Use supplied 18 mm (11/16") spanner to lock the motor rectangular slide nut.
7. Use supplied 8 mm (5/16") Allen key to loosen the bolt.
8. Remove the bolt from the hole while holding the guide roller set.
9. Fit the rectangular slide nut in the sliding slot.
10. Reassemble the guide roller set on the bolt.
11. Fit the bolt to the rectangular slide nut and tighten the bolt. Be careful not to overtighten the bolt.

Original set-up for use on plate

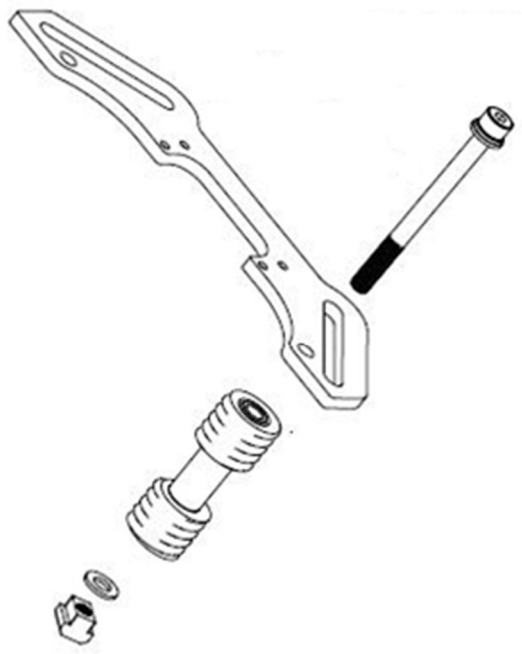

[image 3-9]

New set-up for use on pipe

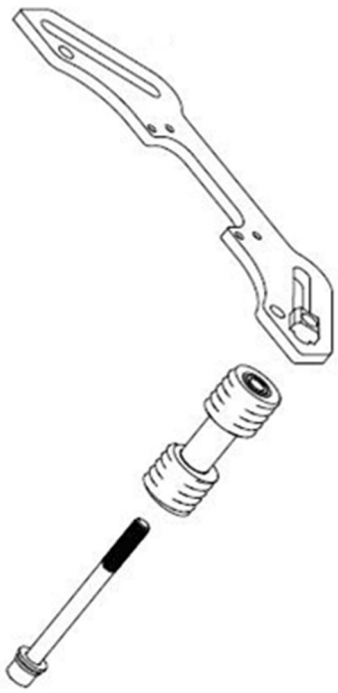

[image 3-10]

4. Using the machine

4.1 Switching machine into standby mode

B60S only

To activate the machines electronics and bring the machine in standby mode, toggle the standby on/off switch from position [0] to position [I]. A burning light inside the switch indicates the electronics are activated.

After each operation the machine must be completely shut off by toggling the standby on/off switch from position [1] to position [0]. This cuts off all power supply to all electronics of the machine, including the motor.
If this is done with the motor still running, the motor will not automatically restart when the standby on/off switch is toggled from position [0] to position [I] again.

4.2 Switching motor on and off

B60

To switch on the motor, press [I] on the motor on/off switch. When the motor runs, the motor check indicator light (green) is burning.
To switch off the motor, press [0] on the motor on/off switch. The motor check indicator light (green) no longer burns.

B60S

To switch on the motor, press the motor start switch. When the motor runs, the motor check indicator light (green) is burning.
To switch off the motor, press the motor stop switch. The motor check indicator light (green) no longer burns.

4.3 Speed adjustment

B60S only

EUROBOOR B60S is equipped with a stepless electronic speed adjustment for the milling head.
The speed adjustment ranges from 1675 rpm (minimum) to 2850 rpm (maximum).

To adjust the speed, the speed adjustment knob needs to be rotated: completely rotated counter-clockwise achieves minimum speed, completely rotated clockwise achieves maximum speed. Be careful not to overturn the speed adjustment knob past the end stops.

On the machine an indicatory range of common material applications is provided. Ranging from slow to high milling head speed:

- Exotic metals (such as Inconel, Hardox)
- Stainless steel
- Grey cast iron
- Construction steel

These indicatory material types are not exclusive, and also other metal types can be processed with this machine. Always check the appropriate speed for the material you are working with, and try a few settings on a test piece before starting with the actual operation.

4.4 Overload protection

B60S only

EUROBOOR B60S is equipped with overload protection.
Overload can be caused by either to fast feeding rate or to deep bevel setting.

When the overload indicator light (red) is flickering, the machine is being used at maximum permitted load. It is best to avoid this kind of situation, as at this stage the operation is not being performed in the fastest way. Also, the motor is still running warm with the risk of permanently damaging its internals.

When the operation is being performed at real overload with continuously burning overload indicator light (red), the machine will protect itself by automatically switching off the motor.

Press the motor off switch to reset the overload protection. Check the workpiece and machine and adjust when necessary. Press the motor on switch to continue operating again.

5. Working with operating tools

WARNING: *Operating a bevelling machine creates hot metal chips than jump away from the workpiece and the machine. Wear appropriate clothing to protect yourself and do not operate the machine in explosive atmosphere, such as in the presence of flammable liquids, gases or dust. Hot machine components, hot metal chips and sparks may ignite the liquids, gases or dust.*

Machine accuracy lays with a 1 mm (1/16") limit (+ and -). Satisfactory results rely heavily on work piece condition and preparation. Surfaces and edges of the workpiece must be even and free from slags or welds. If present, they must be cleaned before operating EUROBOOR B60(S).
Unevenness and obstructions potentially cause personal harm, damage the machine, rapidly decrease the lifetime of tools and do not benefit the operation.

It is advised to create work logs with all applied machine settings for future reference.

5.1 Bevelling plate material

1. Prepare the machine as described in chapter 3

   Angle adjustment:
   Angle adjustment should be between 1° and 60°

   Depth adjustment:
   It is strongly advised to have the depth adjustment not deeper than (additional) 6 mm (1/4") per pass. For example, if you want to create a bevel width of 15 mm (9/16"):

First setting:	6 mm (1/4")
Second setting:	12 mm (1/2")
Third setting:	15 mm (9/16")

2. Position the machine vertically on the right (not left) side of the intended bevel

   WARNING: *Do not let the milling head touch any material yet!*

3. Adjust the machine and switch on the motor as described in chapter 4

4. Firmly grip the machine at its available handles with both hands. Keep in mind the machine should be moved from right to left during operation and potential kick-back from the milling head touching the workpiece may occur. It is advised to position your hands on the handles opposite from each other.

5. Bring the machine towards the workpiece with running motor, in such a way that all guide plates and guide rollers touch the workpiece fully and even. The machine starts milling material from the workpiece.

WARNING: *The milling head might provide kick-back when it touches the workpiece.*

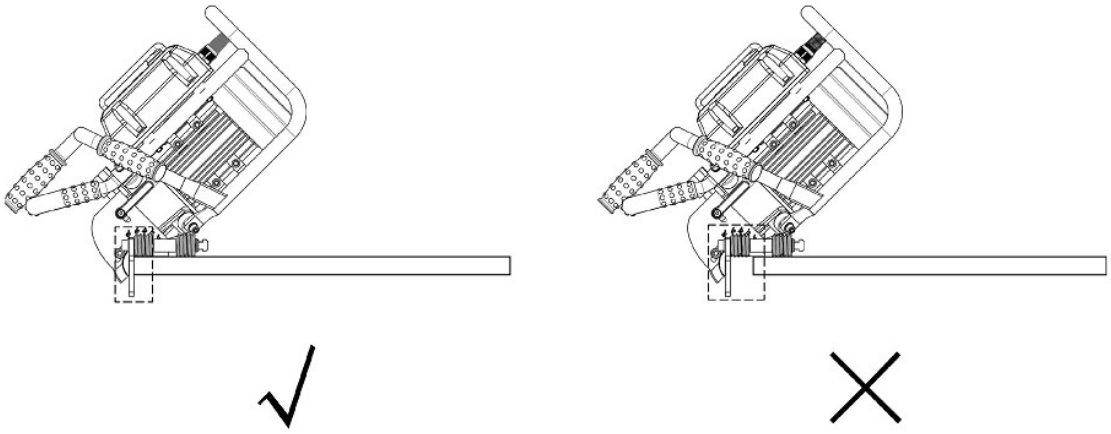

[image 5-1]

6. Slowly start moving the machine from right to left, while continuously checking if all guide plates and guide rollers are still firmly pressed against the workpiece.

   Let the machine do its work, and move the machine evenly slowly along, as fast as the machine is able to remove material. A smooth bevel edge has multiple benefits:
   a. Better finish if it is already the last pass
   b. Better lifetime of tools
   c. Better preparation for next pass when a deep bevel width is required. Any unevenness is exaggerated with each and every pass!

   Any attempt to force the machine beyond its limitations will INCREASE operating time and REDUCE the finish!

7. When nearing the end of the required bevel, firmly (but not too fast) pull the machine from the workpiece.

WARNING: *The milling head might provide kick-back when it touches the workpiece.*

8. Switch off the motor and switch off the machine.

5.2 Facing plate material

1. Prepare the machine as described in chapter 3

   Angle adjustment:

   Angle adjustment should be at 0°

   Depth adjustment:
   It is strongly advised to have the depth adjustment not deeper than (additional) 2 mm (1/16") per pass. For example, if you want to face by a depth of 3 mm (1/8"):

First setting:	2 mm (1/16")
Second setting:	3 mm (1/8")

2. Position the machine vertically on the right (not left) side of the intended bevel

WARNING: *Do not let the milling head touch any material yet!*

3. Adjust the machine and switch on the motor as described in chapter 4

4. Firmly grip the machine at its available handles with both hands. Keep in mind the machine should be moved from right to left during operation and potential kick-back from the milling head touching the workpiece may occur. It is advised to position your hands on the handles opposite from each other.

5. Bring the machine towards the workpiece with running motor, in such a way that all guide plates and guide rollers touch the workpiece fully and even. The machine starts milling material from the workpiece.

WARNING: *The milling head might provide kick-back when it touches the workpiece.*

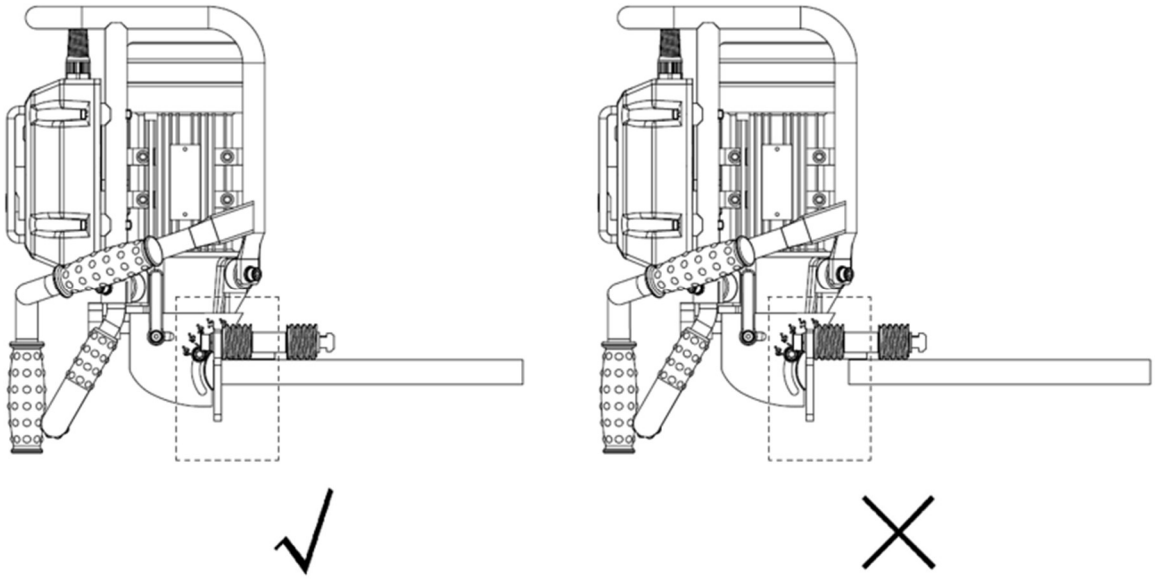

[image 5-2]

6. Slowly start moving the machine from right to left, while continuously checking if all guide plates and guide rollers are still firmly pressed against the workpiece.

   Let the machine do its work, and move the machine evenly slowly along, as fast as the machine is able to remove material. A smooth bevel edge has multiple benefits:
   a. Better finish if it is already the last pass
   b. Better lifetime of tools
   c. Better preparation for next pass when a deep bevel width is required. Any unevenness is exaggerated with each and every pass!

   Any attempt to force the machine beyond its limitations will INCREASE operating time and REDUCE the finish!

7. When nearing the end of the required bevel, firmly (but not too fast) pull the machine from the workpiece.

WARNING: *The milling head might provide kick-back when it touches the workpiece.*

8. Switch off the motor and switch off the machine.

5.3 Bevelling pipe material

Note: Make sure the machine is converted for use on pipe material as described in paragraph 3.7

The standard guide plate assembly allows EUROBOOR B60(S) to be used for bevelling pipes with outer diameter from 150 mm to 1,300 mm (5 15/16" - 51 3/16”).

WARNING: *This bevelling machine has the technical ability to bevel pipes with a diameter up to 1,300 mm. However, keeping the machine stable will require more attention when bevelling pipes with an outer diameter of more than 300 mm. Not paying enough attention will increase the risk of accidents.*

1. Set the depth adjustment to 0
2. Position the machine above the pipe opening
3. Slightly loosen both guide roller assembly bolts (see paragraph 3.7), allowing the rectangular slide nuts to move in the designated slots [image 5-3].

[image 5-3]

4. Symmetrically move the guide rollers to touch the pipe, and tighten the bolts again [image 5-4].

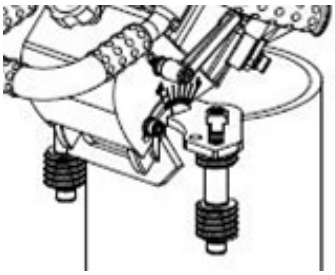

[image 5-4]

5. Prepare the machine as described in chapter 3

Angle adjustment:

Angle adjustment should be between 1 and 60°.

Depth adjustment:
It is strongly advised to have the depth adjustment not deeper than (additional) 6 mm (1/4") per pass. For example, if you want to create a bevel width of 15 mm (9/16"):

First setting:	6 mm (1/4")
Second setting:	12 mm (1/2")
Third setting:	15 mm (9/16")

6. Position the machine vertically on the right (not left) side of the intended bevel.

WARNING: *Do not let the milling head touch any material yet!*

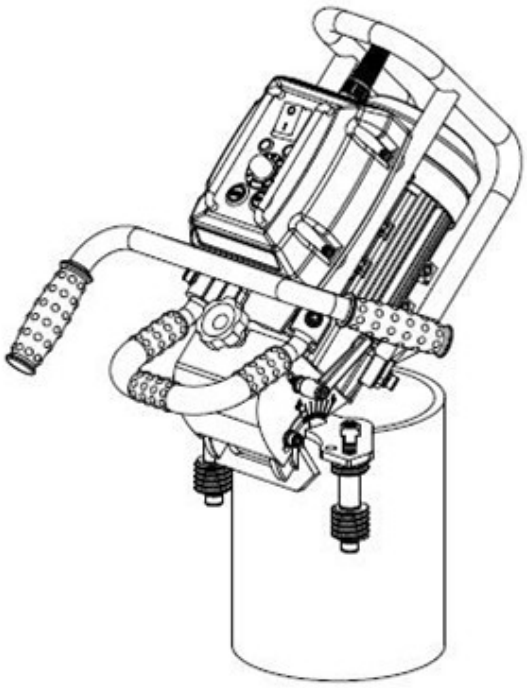

[image 5-5]

7. Adjust the machine and switch on the motor as described in chapter 4.

8. Firmly grip the machine at its available handles with both hands. Keep in mind the machine should be moved from right to left (clockwise direction) during operation and potential kick-back from the milling head touching the workpiece may occur. It is advised to position your hands on the handles opposite from each other.

9. Bring the machine towards the workpiece with running motor, in such a way that all guide plates and guide rollers touch the workpiece fully and even. The machine starts milling material from the workpiece.

WARNING: *The milling head might provide kick-back when it touches the workpiece.*

10. Slowly start moving the machine from right to left (clockwise), while continuously checking if all guide plates and guide rollers are still firmly pressed against the workpiece.
    Let the machine do its work, and move the machine evenly slowly along, as fast as the machine is able to remove material. A smooth bevel edge has multiple benefits:
    a. Better finish if it is already the last pass
    b. Better lifetime of tools
    c. Better preparation for next pass when a deep bevel width is required. Any unevenness is exaggerated with each and every pass!

Any attempt to force the machine beyond its limitations will INCREASE operating time and REDUCE the finish!

11. When nearing the end of the required bevel, firmly (but not too fast) pull the machine from the workpiece.

WARNING: *The milling head might provide kick-back when it touches the workpiece*.

12. Switch off the motor and switch off the machine.

6. Maintenance

Your EUROBOOR power tool has been designed to operate over a long period of time with a minimum of maintenance. Continuous satisfactory operation depends upon proper tool care and regular cleaning.

CAUTION: *To reduce the risk of injury, turn unit off and disconnect machine from power source before installing and removing accessories, before adjusting or changing set- ups or when making repairs. Be sure the switch is in the OFF position. An accidental start-up can cause injury.*

Just as every power tool with moving parts, your EUROBOOR B60(S) also needs regular maintenance.

VISUALLY CHECK THE MACHINE FOR DAMAGE

Machine must be checked before operation for any signs of damage that will affect the operation of the machine. Particular notice must be taken of the mains cable, switches and moving parts. If the machine appears to be damaged it should not be used failure to do so may cause injury or death.

CLEANING

- Clean all dirt, dust, metal chips and burrs from the machine regularly. Special attention is needed for the milling head and its surroundings, as well as the heat sink ribs underneath the electronics housing (on top of the motor). The use of compressed air is advised. Never remove metal chips with bare hands!
- Blow dirt and dust out of the motor housing with compressed air as often as dirt is seen collecting in and around the air vents. Wear approved eye protection and an approved dust mask.
- Never use solvents or other harsh chemicals for cleaning the non-metallic parts of the tool. These chemicals may weaken the materials used in these parts. Use a cloth dampened only with water and mild soap. Never let any liquid get inside the tool; never immerse any part of the tool into a liquid.

PRESERVATION

Moving parts, such as the guide rollers, should regularly be lubricated using a very thin layer of general machine oil. Light lubrication also works as rust prevention when the machine is put out of use for a certain period.

OPERATION OF THE MACHINE

The machines operation must be checked to ensure that all components are working correctly. Replace any defective parts immediately. This prevents properly function parts from being damaged.

REPAIR, MODIFICATION AND INSPECTION

Repair, modification and inspection of EUROBOOR B60(S) must be done by EUROBOOR or an EUROBOOR authorised dealer. The spare parts list will be helpful if presented with the machine to the EUROBOOR dealer for service when requesting repair or other maintenance.

EUROBOOR machines are constantly being improved and modified to incorporate the latest technological advancements. Accordingly, some parts (i.e. part numbers and/or design) may be changed without prior notice. Also, due to EUROBOOR's continuing program of research and development, the specifications of machines are subject to change without prior notice.

WARNING: *Since accessories, other than those offered by EUROBOOR, have not been tested with this product, use of such accessories with this tool could be hazardous. To reduce the risk of injury, only EUROBOOR recommended accessories should be used with this product. Consult your dealer for further information on the appropriate accessories.*

7. Trouble shooting

Machine can't be activated completely	- Machine not connected to appropriate power supply - Damaged or defective wiring - Defective fuse - Defective switch(es) - Defective control unit
Motor does not work	- Damaged or defective wiring - Motor internals worn-out or damaged - Defective switch - Defective control unit
Motor running roughly and/or seizing up	- Bent spindle - Shaft extending from the motor is bent - Damaged or obstructed milling head
Motor humming, big sparks and motor has no force	- Motor damaged (burned)
Frame under voltage	- Damaged / defective wiring - Machine highly contaminated / dirty
Fuse blows when motor is started	- Machine not connected to appropriate power supply - Damaged or defective wiring - Wrong value fuse - Motor running roughly - Motor internals worn-out or damaged - Defective control unit

8. Exploded view & spare parts list

8.1 Exploded views

B60

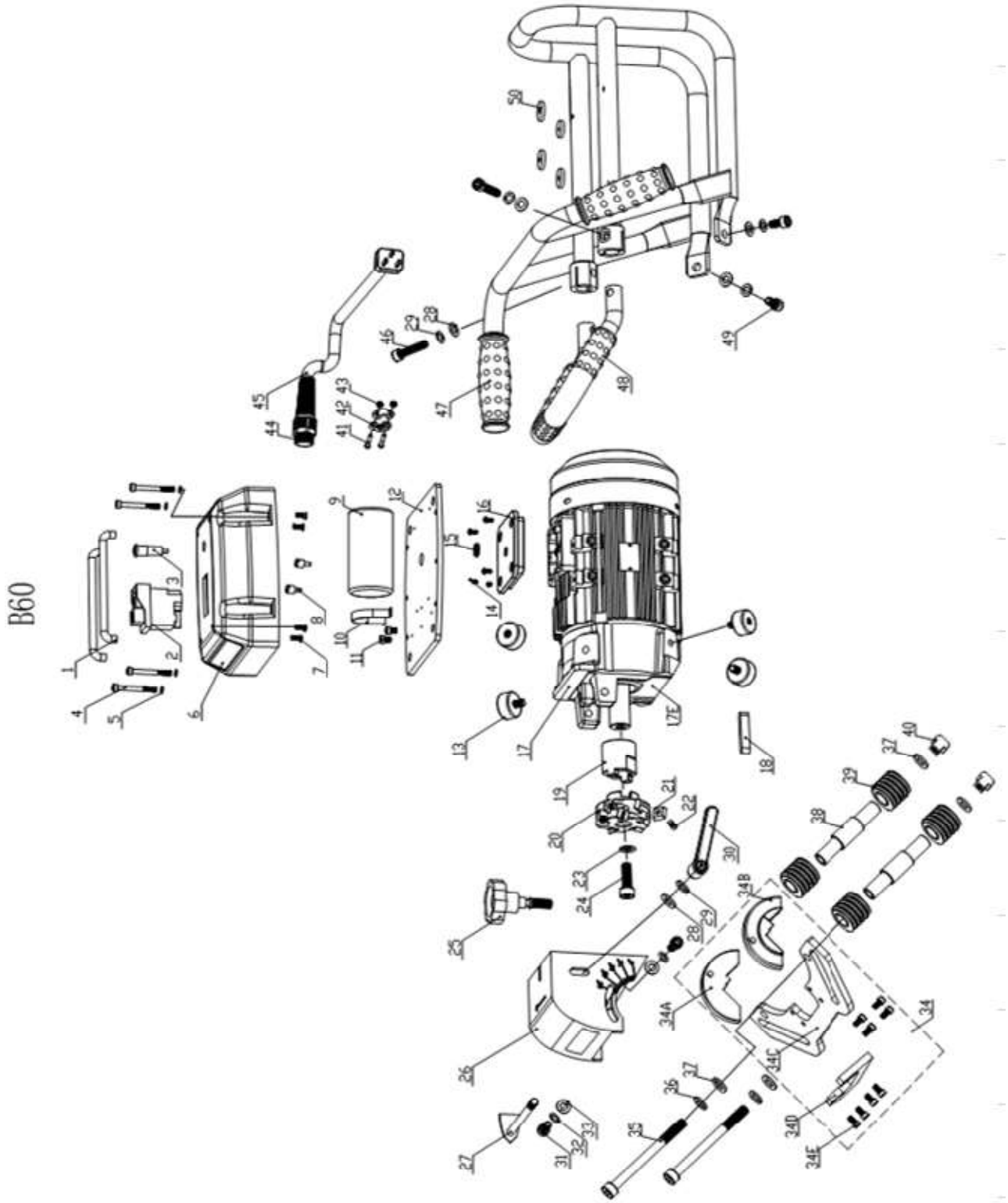

B60 (continued)

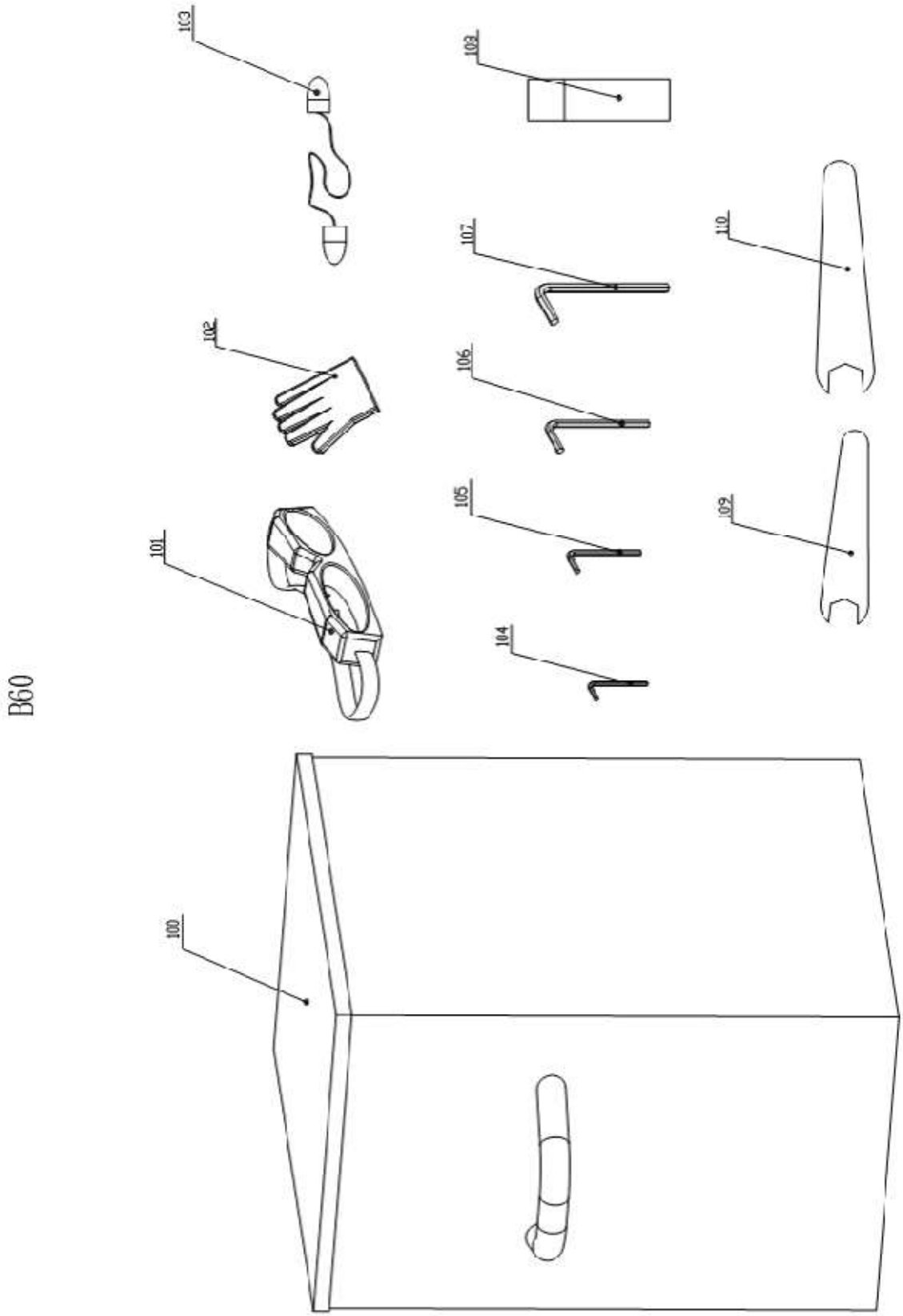

B60S

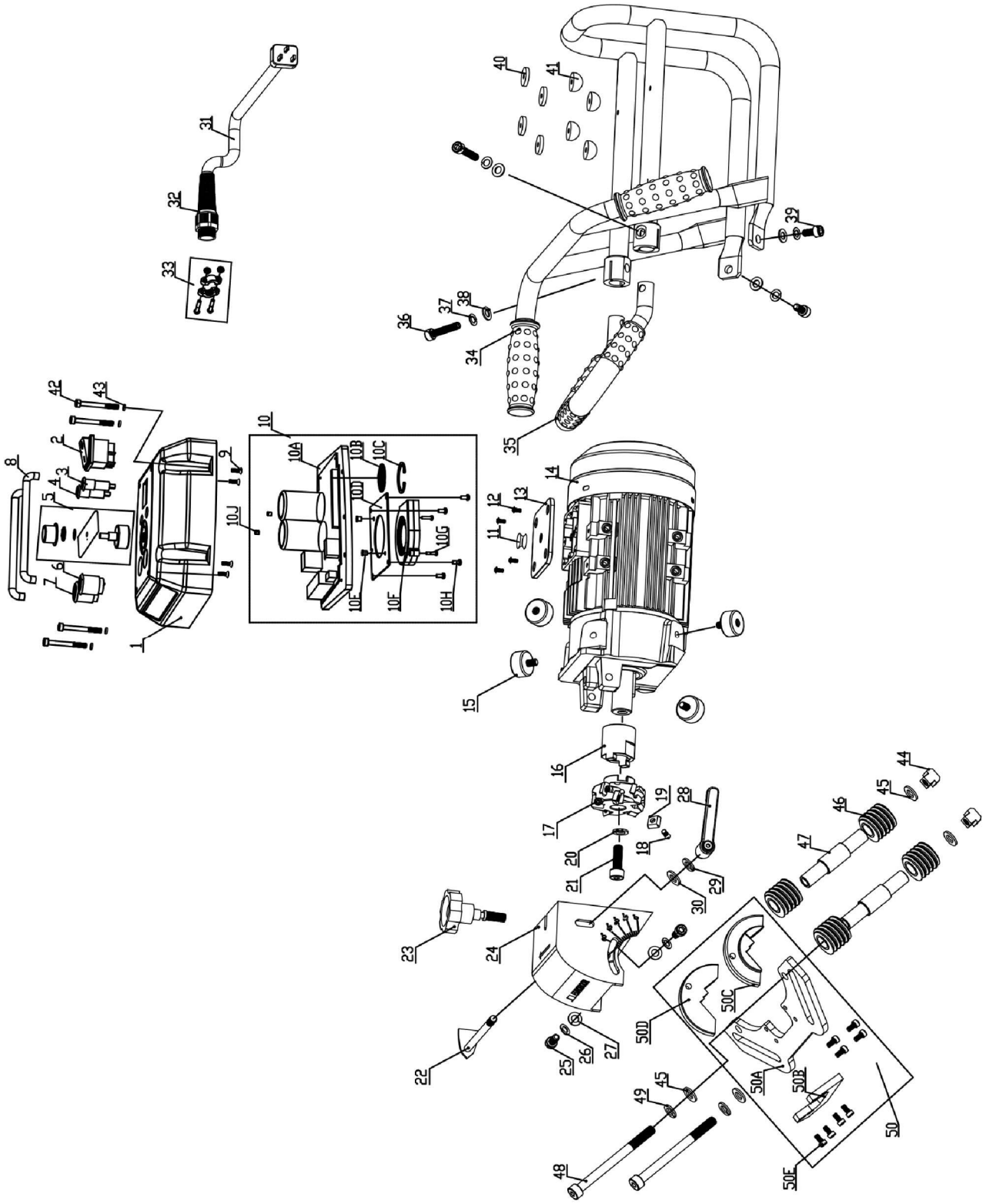
1
2
3
4
5
6
7
8
9
10
10A
10B
10C
10D
10E
10F
10G
10H
10J
11
12
13
14
15
16
17
18
19
20
21
22
23
24
25
26
27
28
29
30
31
32
33
34
35
36
37
38
39
40
41
42
43
44
45
46
47
48
49
50
50A
50B
50C
50D
50E

B60S (continued)

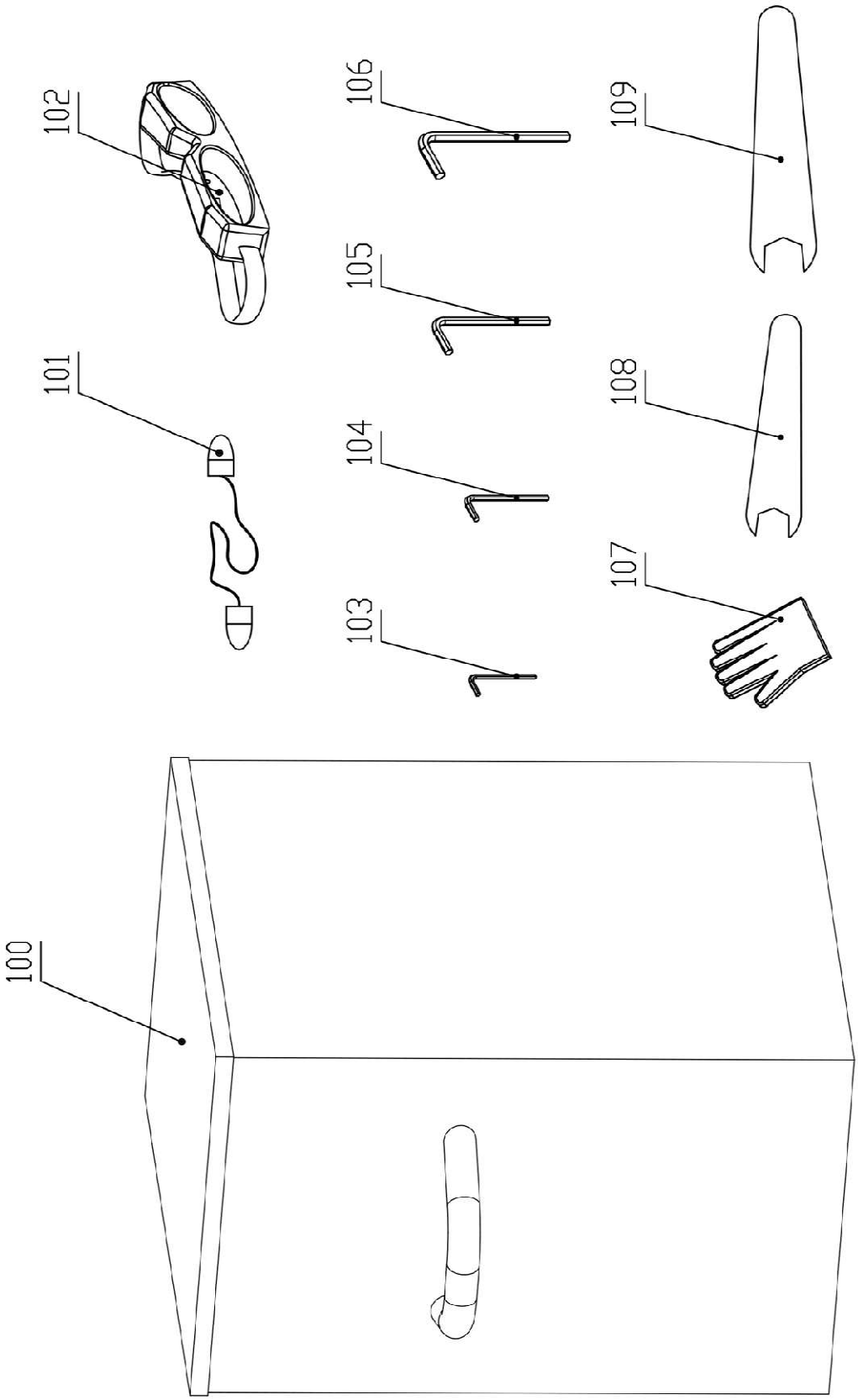

8.2 Spare parts list

B60

No.	Part number	Description	Qty
1	B60.0022	Protective handle	2
2	030E.0091/Y2	On / off switch 220V	1
	030E.0092/Y2	On / off switch 110V	1
3	B60.0018A	Green signal light 220V	1
4	B60.0016	Inner six angle bolt	4
5	020.0217	Spring washer	4
6	B60.1008B	Electrical box assembly B60	1
7	020.0101	Panel screw BKVZ M4 x 8	4
8	B60.0035	Cylindrical pin ϕ5	2
9	B60.0066	Capacitance	1
10	B60.0067	Capacitor holder	1
11	B60.0068	Screw M5 x 8	2
12	B60.0007B	Cooling plate	1
13	B60.0004	Rubber isolator	4
14	020.0329	Screw M4 x 16	4
15	B60.0008	Rubber cord protector	1
16	B60.0054	Motor cable end cover	1
17	B60.1001B	Motor assembly 220V	1
	B60.1001C	Motor assembly 110V	
18	B60.0002	Key	1
19	B60.0026	Cutter head connecting sleeve	1
20	B60.0027	Cutter body	1
21	LKS.15	Cutting plate	10
22	B60.0029	Screw	10
23	B60.0030	Elastic washer	1
24	B60.0031	Screw	1
25	B60.0032	Adjustment knob	1
26	B60.1009	Cutter head cover with logo tag	1
27	B60.0034	Pointer plate	1
28	020.0305	Washer M8	5
29	100.0031	Spring washer	5
30	B60.0036	Adjustable handle	1
31	B60.0046	Screw	2
32	B60.0056	Spring washer	2
33	B60.0055	Levelling pad	2

No.	Part number	Description	Qty
34	B60.1006	Guide plate assembly:	1
34A	B60.0037	Left semicircle slider	1
34B	B60.0038	Right semicircle slider	1
34C	B60.0039	Lower plate	1
34D	B60.0040	Upper plate	1
34E	020.0223	Screw M5 x 10	8
35	B60.0041	Screw M10	2
36	B60.0030	Elastic washer	2
37	B60.0042	Flat washer M10	4
38	B60.0044	Sleeve steel	2
39	B60.0043	Contact roller	4
40	B60.0045	T-nut	2
41-43	020.0037	Cable clamp complete	1
44	020.0031	Coupling nut PG11 (main cable)	1
45	020.0036	Main cable 220V - 240V EU	1
	020.0036/AU	Main cable 220V - 240V AU	
	020.0036/UK	Main cable 220V - 240V UK	
	020.0036/UK 110-16A	Main cable 110V - 120V UK 16A	
	020.0036/USA	Main cable 110V - 120V USA	
46	B60.0062	Inner hex bolt	2
47	B60.1003	Frame	1
48	B60.1004	Handle bar U-shaped	1
49	B60.0063	Inner hex bolt	2
50	B60.0014	Duckbill gasket	4
100	CAS.B60	Metal case	1
101	SAF.100	Safety goggles	1
102	PRM.61	Protective gloves M	1
	PRM.62	Protective gloves L	
	PRM.63	Protective gloves XL	
103	SAF.200	Ear plugs	1
104	B60.0049	Spanner Torx T20	1
105	IMB.US4	Allen key 4.0 mm	1
106	IMB.US6	Allen key 6.0 mm	1
107	IMB.US8	Allen key 8.0 mm	1
108	B60.0052	Tool box	1
109	B60.0050	Open spanner 18 mm	1
110	B60.0051	Open spanner 32 mm	1

B60S

No.	Part Number	Description	Qty
1	B60.0019-1	Electrical box	1
2	B60.0023	Switch waterproof ship type 220V	1
	B60.0023A	Switch waterproof ship type 110V	
3	B60.0018	Green signal light	1
4	B60.0017	Red signal light	1
5	B60.1007	Potentiometer integration	1
6	B60.0025	Green button	1
7	B60.0024	Red button switch	1
8	B60.0022	Protective handle	2
9	020.0101	Panel screw BKVZ M4 x 8	4
10	PB60S.1002	Converter integration 220V	1
	PB60S.1002A	Converter integration 110V	1
11	B60.0008	Rubber cord protector	1
12	air.0016	Screw M4 x 8	4
13	B60.0089	Motor cover plate	1
14	B60.1001	Motor assembly 220V	1
	B60.1001A	Motor assembly 110V	1
15	B60.0004	Rubber isolator	4
16	B60.0026	Cutter head connecting sleeve	1
17	B60.0027	Cutter body	1
18	B60.0029	Screw	10
19	PB60.0028	Cutting plate B60(S)	1
20	B60.0030	Elastic washer	1
21	B60.0031	Screw	1
22	B60.0034	Pointer plate	1
23	B60.0032	Adjusting plum handle set	1
24	B60.0033	Cutter head cover	1
25	B60.0046	Screw	2
26	B60.0056	Spring washer	2
27	B60.0055	Leveling pad	2
28	B60.0036	Adjustable handle	1
29	100.0031	Washer M8	1
30	020.0305	Washer M8	1
31	030.B125	Main cable set 220V EU	1
	020.0036/USA	Main cable 110V USA	
	020.0036/AU	Main cable 220V AU	
	020.0036/UK	Main cable 220V UK	
	020.0036/UK 110-16A	Main cable 110V UK 16A	
32	020.0031	Coupling nut PG11 (main cable)	1
33	032.1020X-CK	Cable-clamp set	1

No.	Part Number	Description	Qty
34	B60.1003	Frame	1
35	B60.1004	Handle bar U-shaped	1
36	B60.0062	Inner hex bolt	2
37	100.0031	Washer M8	4
38	020.0305	Washer M8	4
39	B60.0063	Inner hex bolt	2
40	B60.0081A	Gasket	4
41	B60.0081	Duckbill gasket	4
42	360.1007	Bolt M5 x 60	4
43	020.0217	Spring washer	4
44	B60.0045	T-nut	2
45	B60.0042	Flat washer M10	4
46	B60.0043	Contact roller	4
47	B60.0044	Sleeve steel	2
48	B60.0041	Screw M10	2
49	B60.0030	Elastic washer	2
50	B60.1006	Guide plate assembly	1
50A	B60.0039	Lower plate	1
50B	B60.0040	Upper plate	1
50C	B60.0038	Right semicircle slider	1
50D	B60.0037	Left semicircle slider	1
50E	020.0223	Screw M5 x 10	8
100	CAS.B60	Metal case	1
101	SAF.200	Ear plugs	1
102	SAF.100	Safety goggles	1
103	B60.0049	Spanner Torx T20	1
104	IMB.US4	Allen key 4.0 mm	1
105	IMB.US6	Allen key 6.0 mm	1
106	IMB.US8	Allen key 8.0 mm	1
107	EBGLV.M	Euroboor working gloves size M	1
	EBGLV.L	Euroboor working gloves size L	
	EBGLV.XL	Euroboor working gloves size XL	
108	B60.0050	Open spanner 18 mm	1
109	B60.0051	Open spanner 32 mm	1

8.3 Wiring diagrams

B60

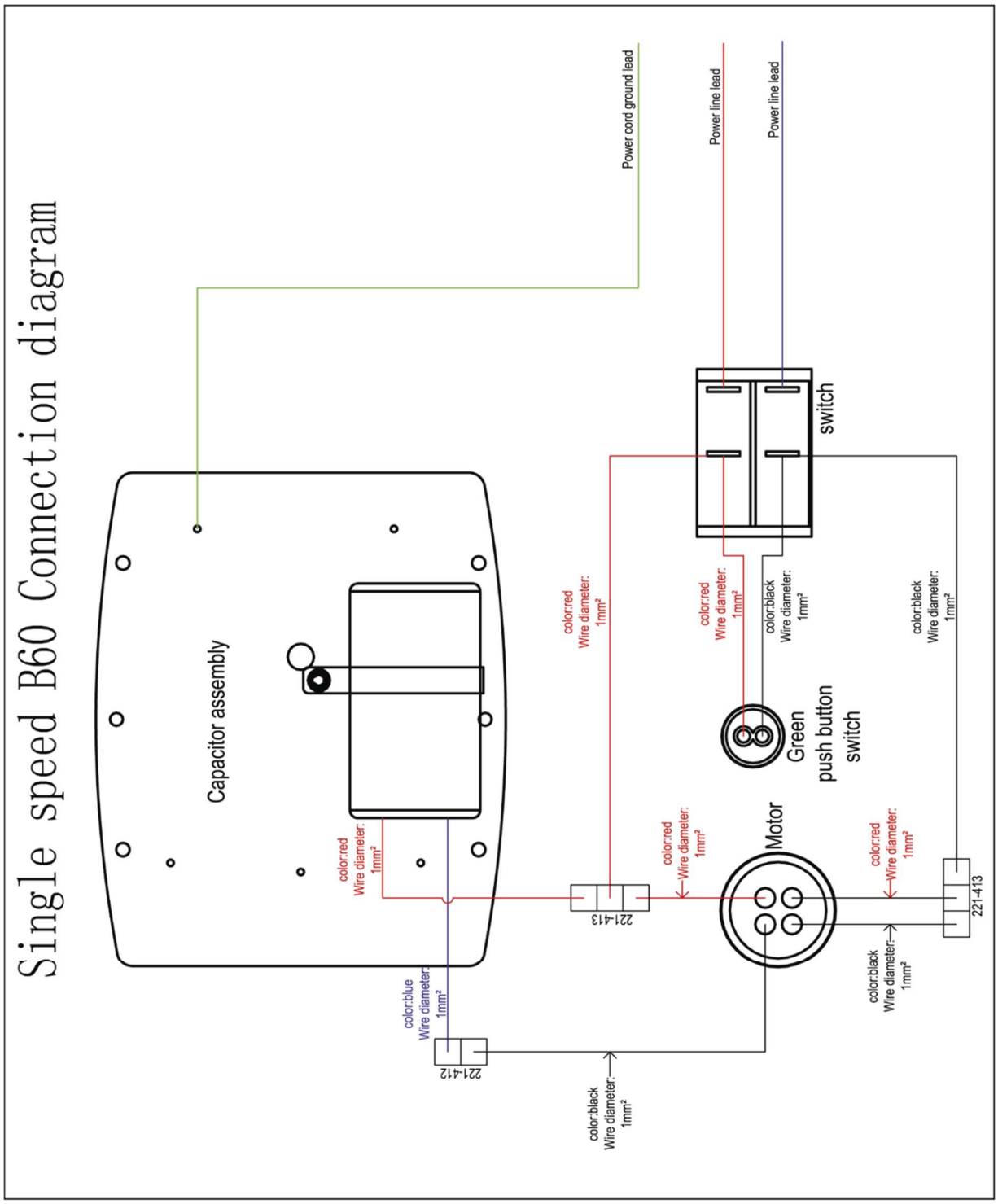

B60S

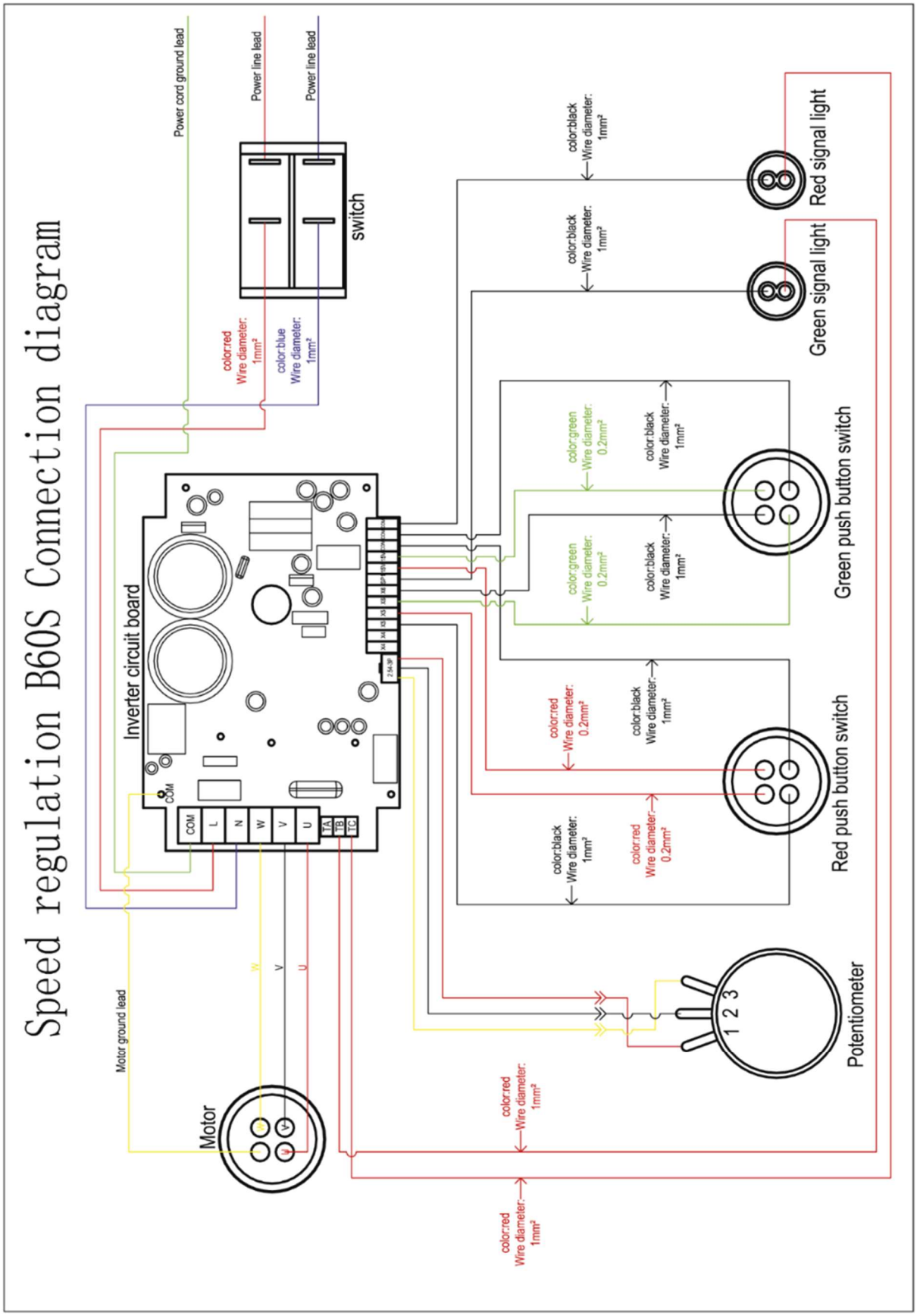
Speed regulation B60S Connection diagram
Power cord ground lead
Power line lead
Power line lead
switch
color:red
Wire diameter:
1mm²
color:blue
Wire diameter:
1mm²
Inverter circuit board
COM
L
N
W
V
U
TA
TB
TC
color:black
Wire diameter:
1mm²
Red signal light
Green signal light
color:green
Wire diameter:
0.2mm²
Green push button switch
color:red
Wire diameter:
0.2mm²
Red push button switch
Motor ground lead
Motor
Potentiometer
1 2 3

9. Warranty and service

Warranty

Euroboor B.V. warrants this machine to be free of material defects and workmanship errors under normal use for a period of 12 months after date of purchase. This 12-month period can be extended to 24 months in total by registering the product on our website: https://www.euroboor.com/int-en/support/register-your-machine/

Serial number:	
Date of purchase:	/ /

Service

To maximise the lifetime of your EUROBOOR machine always use service and parts from an official EUROBOOR distribution channel. Whenever in need of such, always contact original point of sales or if no longer existent the distributor of EUROBOOR products in your country.

10. Certifications

10.1 CE Declaration of conformity

EUROBOOR BV declares that the following appliance complies with the appropriate basic safety and health requirements of the EC guidelines based on its design and type, as brought into circulation by EUROBOOR BV.

Designation/function	Bevelling Machine
Brand	EUROBOOR
Types	B60(S)
Ratings and principal	220 - 230V AC, 50-60Hz, Class I
Characteristics	Power 1,100W (10A)
	Speed 2,850 rpm
Applicable guidelines	2006/42/EC on machinery
	2014/30/EU on Electromagnetic Compatibility (EMC)
Used test standards	IEC 62841-1: 2014, COR1:2014, COR2:2015;
	EN 62841-1:2015
	EN 55014-1:2017
	EN IEC 61000-3-2:2019, EN 61000-3-3:2013+A1:2019
Certificate ref. No.	DK-117352-UL
Testing laboratory:	UL LLC
Date issued:	2021-08-04

Zoetermeer, 13 October 2021

Albert Koster

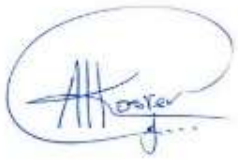

Managing Director

10.2 Proof of certificate of compliance (CoC)

US

Certificate Number:	UL-US-2142031-0
Date issued:	8-Sep-2021
Issued to:	EUROBOOR
This is to certify that:	representative samples of Portable Electric Tools: **B60(S) Beveling Machine** Have been investigated by UL in accordance with the Standard(s) indicated on this Certificate.
Standard(s) for Safety:	UL 62841-1, 1st Ed., Issue Date: 2015-02-20, Revision Date: 2020-08-21
Testing laboratory:	UL LLC

Canada

Certificate Number:	UL-CA-2135275-0
Date issued:	8-Sep-2021
Issued to:	EUROBOOR
This is to certify that	representative samples of Portable Electric Tools Certified for Canada: **B60(S) Beveling Machine** Have been investigated by UL in accordance with the Standard(s) indicated on this Certificate.
Standard(s) for Safety:	CSA C22.2 NO. 62841-1-15, 1st Ed., Issue Date: 2015-02-20, Revision Date: 2020-08-21
Testing laboratory:	UL LLC